十速

TM56E6422

DATA SHEET

Rev 1.40

tenx reserves the right to change or discontinue the manual and online documentation to this product herein to improve reliability, function or design without further notice. **tenx** does not assume any liability arising out of the application or use of any product or circuit described herein; neither does it convey any license under its patent rights nor the rights of others. **tenx** products are not designed, intended, or authorized for use in life support appliances, devices, or systems. If Buyer purchases or uses **tenx** products for any such unintended or unauthorized application, Buyer shall indemnify and hold **tenx** and its officers, employees, subsidiaries, affiliates and distributors harmless against all claims, cost, damages, and expenses, and reasonable attorney fees arising out of, directly or indirectly, any claim of personal injury or death associated with such unintended or unauthorized use even if such claim alleges that **tenx** was negligent regarding the design or manufacture of the part.

PRECAUTION

1. **The user must switch RDCTL to “4ns” to enhance the performance of minimal operating voltage**
2. **A sleep instruction is necessary before the event of pin-change otherwise pin-change event may be missed.**
3. **To read the chapter of "FAMILY OVERVIEW" before the emulation to understand the limitation.**

AMENDMENT HISTORY

Version	Date	Description
0.9	Apr, 2024	1. Update Characteristics Graphs 2. Update EEPROM Characteristics, DC Characteristics, Clock Timing, Reset Timing Characteristics, LVR/LVD Circuit Characteristics, ADC Electrical Characteristics, EEPTE 3. Update Package Types in FEATURES 4. Update FAMILY OVERVIEW 5. Update EEP write/erase cycle as 40K@25℃/5V 6. Delete TBD 7. Delete the description about endurance in the section of EEPROM. 8. Update Ordering number
0.91	May, 2024	1. Delete items of wafer and dice in Ordering Information 2. Update POR curve 3. Update PWM0 Block Diagram for PWM0PMSK/PWM0NMSK/PWM0MSKE 4. Modify the description of ADVREFS 5. Add PSDA and PSCL into the chapters of PIN ASSIGNMENT DIAGRAM, PIN DESCRIPTION and PIN SUMMARY 6. Replace “non-overlap” with “dead-zone(non-overlap)” 7.Modify the description of EEPIF 8. Add the section of “The Precaution of EEPROM Programming”
0.92	Aug, 2024	1. Replace “dead zone” with “dead-zone(non-overlap)” in the sections of “6.5.1.1 Normal Mode” and “6.5.1.2 Half-Bridge Mode” 2. Add description: VPP could be VCC, VSS or floating when EEPROM is programming. 3. Add comment about ATD 4. Update the link of “MOVX” 5. Modify the example for writing EEPROM 6. Modify the method to clear interrupt flag 7. Add comment: EEPTO will be cleared when EEPEN is disabled 8. Delete the rows before version 0.9 in the table of “AMENDMENT HISTORY” 9. Fix typos in the example of C language of table read 10. Add comments for PORSEL, ATDOFF, SCKTYPE and FCKTYPE. 11. Add the relative description of “External Crystal/Resonator oscillator” 12. Add description for LCD. 13. Change FIRC frequency from -5%~+2% to -4%~+3% 14. Change the condition of FIRC frequency from “25℃, 3~5V” to “25℃, 3.5~5V” 15. Change FIRC frequency from “-3%~+1.5%” to “-2.5%~+2%” in the condition of “-40℃ ~ 105℃, 4V” 16. Add comment for “Clock Timing”: The value of this parameter is based on the characteristics of tested samples. 17. Add comment for ELECTRICAL CHARACTERISTICS: All of the parameters are based on the characteristics of tested samples. 18. Add comments for SIRC: 65.5KHz±2%@25℃/Vcc=5V 19. Add LVCTL into the section of “Low Voltage Reset (LVR)” and the chapter of “Interrupt”
0.93	Dec, 2024	1. Fix typo: The reset value of LVDHYS is 0 2. Add the specification of ADC conversion current 3. Add condition into “BandGap Voltage Reference” and “ADC reference voltage”: No power disturbance 4. Change EEPROM write time as “typ 4ms@V_{CC}=2.5V/25℃, 1.5ms@V_{CC}=5V/25℃” in the section of “1.3 EEPROM” 5. Add “PWM trigger ADC” into the block diagram of “Analog-to-Digital Converter” 6. Add CMPTRIG and ADVREF1P2 into the block diagram of Comparator 7. Add comment: ATD off(recommend for EFT issue) 8. Add “LCD 1/2 bias” into the table of “PIN DESCRIPTIONS”. 9. Fix typo: replace CIN with CIN1 for PA3 in the table of “PIN SUMMARY”
0.94	Jan, 2025	1. Add “pin change” into the description in the section of STOP mode Setting. 2. Add the figures of “PA7 Structure” and “Constraint on PA7”, and update the figure of “General Pin Structure” 3. Delete the specification of FIRC Frequency @4V/25℃ in the chapter of ELECTRICAL CHARACTERISTICS

0.95	Apr, 2025	1. Modify the description about TM0IF below Timer0 Block Diagram 2. Fix typo: 16-channel ADC 3. Re-divide the paragraphs of section 6.7 Comparator 4. Fix typo for the value of ADCTL2 in the example of 6.6.1 Normal Trigger ADC 5. Add a simple explanation of pin-change wakeup 6. To change “pin change”, “wake up” and “wakeup” as pin-change, wake-up and wake-up respectively in somewhere of this document. 7. Add the function of pin-change wake-up into the system block diagram. 8. Replace “I^2C SCL for program” and “I^2C SDA for program” with “clock for programmer” and “data for programmer” respectively. 9. Add supplementary explanation about pin-change wake-up into the table of family overview 10. Add Precaution for EEPROM writing 11. Add “clrx INTIE/INTIE1” into the example of writing EEPROM. 12. Change Wake-up as “Wake-up Interrupt” in the table of “PIN SUMMARY” 13. Change the maximum input voltage in the table of “ADC Electrical Characteristics” as V_{REF} 14. Add comments into the parameter column of the table of “ADC Electrical Characteristics” 15. Add port D into the condition of R_{UP} 16. Modify Timer0/1 block diagram 17. Fix something about ADVREFS 18. Change Vbg from 2.48V to 2.56V 19. Change POR in the table of “FAMILY OVERVIEW” from 1.53V to 1.63V 20. Change ADVREFS in the figure of ADC block diagram from 2.48V to 2.56V
1.00	Aug, 2025	1. Change the size of some figures in the ”PWM: 16 bits PWM” section. 2. Delete the some “MTP” characters 3. Modify the system block diagram 4. Move “AMENDMENT HISTORY” to the tail of this document 5. Delete the model name in the chapter of “APPENDIX: PIN ASSIGNMENT DIAGRAM” 6. Add “APPENDIX: PIN ASSIGNMENT DIAGRAM“ 7. Modify some description in the Program ROM(PROM) section 8. Modify the table of PIN SUMMARY 9. Modify some description in “Programming Counter (PC) and Stack” section. 10. delete 65.5KHz in the “Syetem Clock” section 11. Add the chapter of “PRECAUTIONS”. 12. delete 85KHz in the example of Timer1 section 13. Modify the description about LVR 14. Modify the description about the size of ROM, RAM and EEPROM in the table of “FAMILY OVERVIEW” 15. Modify the description of LVDS 16. Modify the description of package types in the chapter of “FEATURES”. 17. Add the description about pin-change into the chapter of “PRECAUTION”
1.10	Jan, 2026	1. Modify “ADC Block Diagram” 2. Delete the column of pin number in the table of pin summary 3. Add MSOP-10
1.20	Mar, 2026	1. Move “APPENDIX: PIN ASSIGNMENT DIAGRAM“ to the front 2. Modify comment: Software initialization is necessary for the pads that are not bonded or unused. 3. Add “Pull-down Resistor” into the table of “DC Characteristics” 4. Change Rup to Rpu
1.30	Apr, 2026	1. Change the specification of $V_{CC}/4$ reference voltage in the table of ADC Electrical Characteristics
1.40	Aug, 2026	1. Move “AMENDMENT HISTORY” before table of contents 2. Delete the link in the feature of Package Types 3. Modify the format of Date in “AMENDMENT HISTORY”

CONTENTS

PRECAUTION **2**
AMENDMENT HISTORY **3**
CONTENTS **5**
FAMILY OVERVIEW **7**
FEATURES **8**
SYSTEM BLOCK DIAGRAM **11**
PIN ASSIGNMENT DIAGRAM **12**
PIN DESCRIPTIONS **14**
PIN SUMMARY **15**
FUNCTION DESCRIPTION **16**
1 CPU Core 16
1.1 Program ROM (PROM) 16
1.1.1 Reset Vector (000h) 16
1.1.2 Interrupt Vector (004h) 16
1.2 System Configuration Register (SYSCFG) 17
1.3 EEPROM 17
1.3.1 The Precaution of EEPROM Programming 19
1.4 RAM Addressing Mode 21
1.5 Programming Counter (PC) and Stack 24
1.5.1 ALU and Working (W) Register 27
1.5.2 STATUS Register (003h/083h/103h/183h) 27
2 Reset 30
2.1 Power on Reset (POR) 30
2.2 Low Voltage Reset (LVR) 30
2.3 External Pin Reset (XRST) 30
2.4 Watchdog Timer Reset (WDTR) 31
3 Clock Circuitry and Operation Mode 31
3.1 System Clock 31
3.2 Dual System Clock Modes Transition 34
3.3 System Clock Oscillator 37
4 Interrupt 38
5 I/O Port 43
5.1 PA0-PA7, PB0-PB7, PD0-PD1 43
5.2 Pin-change Wake-up & Interrupt 49
6 Peripheral Functional Block 50
6.1 Watchdog (WDT) /Wake-up (WKT) Timer 50
6.2 Timer0 53
6.3 Timer1 57
6.4 T2:15-bit Timer 60

6.5 PWM: 16 bits PWM 62
6.5.1 PWM0 62
6.5.2 PWM1~5 66
6.6 Analog-to-Digital Converter 71
6.6.1 Normal Trigger ADC 71
6.6.2 PWM Trigger ADC 72
6.7 Comparator 75
6.8 Cyclic Redundancy Check (CRC) 78
6.9 S/W Control LCD Driver 79

MEMORY MAP 81

INSTRUCTION SET 91

ELECTRICAL CHARACTERISTICS 105

1. Absolute Maximum Ratings 105
2. DC Characteristics 105
3. Clock Timing 106
4. Reset Timing Characteristics 106
5. LVR Circuit Characteristics 107
6. LVD Circuit Characteristics 107
7. ADC Electrical Characteristics 108
8. EEPROM Characteristics 108
9. Comparator Characteristics 109
10. Characteristics Graphs 109

PACKAGING INFORMATION 113

FAMILY OVERVIEW

	TM56F1552 (TK) TM56F1522 (IO)	TM56E6422
EV board	On chip debug	TM56F1552 (TK) TM56F1522 (IO)
ROM	4k x 16	Please refer to the data in the chapter of "FEATURES". (Left click the link to go to that page)
RAM	336	
EEPROM	128	
EEPROM write	Halt CPU until EEP write complete	CPU is still running. Use EEPIF to confirm whether the write is complete
EEPROM read	No limit	Before EEPIF=1, EEPROM cannot be read
EEPIF	X	V
CTK	V	X
SIRC	84 KHz@5V/25℃	65.5 KHz±2%@25℃/5V
WDT	96ms, 192ms, 768ms,1536ms @5V	125ms, 250ms, 1001ms, 2001 ms @5V
WKT	12ms,24ms,48ms,96ms @5V	15.6ms,31.3ms,62.5ms,125ms @5V
SFR.RDCTL	X	V (suggest RDCTL=4ns)
OPA	V	X
SFR.OPOF (CMPP to OPO)	OPOF=0 (POR, CMPP <= OPO) OPOF=1 (CMPP <= CIPx)	No OPA must set OPOF =1 in emulation (CMPP connect to CIPx)
SFR.ADVREFS	VCC / 2.48V	VCC /1.2V / 2V / 2.56V ADVREFS=1.2V/2V, could not be emulated
SFR.BG2TRIM	X	Read BG2TRIM and Write into BGTRIM, obtain ADVREFS=2.0V
SFR.SVRF (DAC VREF)	VCC / 1.2 / 2.48V	VCC / 1.2 / 2.56V
High Sink	75mA@5V	62mA@5V for all pins except PA7; **PA7 has no high sink, 1/2 bias and resistor pull-down**
POR	1.95V No PORSEL	1.63V Has PORSEL
Minimal Operating Voltage	1.9V @16MHz	2.3V @16MHz(PWMCKS=FIRC*1)
LVR_{th}	2.05V~4.15V	1.73V~3.5V
LVD_{th}	2.2V~4.15V	1.73V~3.5V
PWM	PWM0CLK: CPUCLK or FIRC (16MHz) or FIRC*2 (32MHz) Normal PWM	PWM0CLK: CPUCLK or FIRC/256 or FIRC (16MHz) or FIRC*2 (32MHz) Normal and Half-bridge PWM
ATD	X	V
All Pin-change Wake-up Interrupt	has pin-change wake-up, but no relative interrupt and flag	V
PWM Trigger ADC	X	V

FEATURES

4. **ROM: 4K x 16 bits MTP**
5. **EEPROM: 256 x 8 bits**
6. **RAM: 256 x 8 bits**
7. **STACK: 8 Levels**
8. **System Clock type selections:**
   - Fast clock from 1~20 MHz Crystal (FXT)
   - Fast clock from Internal RC (FIRC, 16 MHz)
   - Slow clock from 32768 Hz Crystal (SXT)
   - Slow clock from Internal RC (SIRC, 65.5 KHz+-2%@25℃/V_{CC}=5V)
9. **System Clock Prescaler:**
   - System Clock can be divided by 1/2/4/8 option
10. **Power Saving Operation Mode**
    - FAST Mode: Slow-clock is enabled, Fast-clock keeps CPU running
    - SLOW Mode: Fast-clock can be disabled or enabled, Slow-clock keeps CPU running
    - IDLE Mode: Fast-clock and CPU stop. Slow-clock, T2, or Wake-up Timer keep running
    - STOP Mode: All clocks stop, T2 and Wake-up Timer stop
11. **3 Independent Timers**
    - Timer0
      - 8-bit timer divided by 1~256 pre-scale option / auto-reload / counter / interrupt / stop function
    - Timer1
      - 8-bit timer divided by 1~256 pre-scale option / auto-reload / interrupt / stop function
      - Overflow and Toggle out
    - T2
      - 15-bit timer with 4 interrupt interval time options
      - IDLE mode wake-up timer or used as one simple 15-bit time base
      - Clock source: Slow-clock, Fsys/128, or FIRC/512 (16 MHz/512)
12. **Interrupt**
    - Three External Interrupt pins
      - 1 pin is falling edge wake-up triggered & Interrupts
      - 2 pins are rising or falling edge wake-up triggered & Interrupt
    - Timer0 / Timer1 / T2 / Wake-up Timer Interrupt
    - ADC Interrupt
    - Comparator Interrupt
    - PWM Interrupt

- LVD Interrupt
- All Port Pin-change Wake-up Interrupt
- EEPROM Interrupt

13. Wake-up Timer (WKT)

- Clocked by built-in RC oscillator with 4 adjustable interrupt times
  - 15.6 ms / 31.3 ms / 62.5 ms / 125 ms @V_{CC}=5V

14. Watchdog Timer (WDT)

- Clocked by built-in RC oscillator with 4 adjustable reset times
  - 125 ms / 250 ms / 1001 ms /2001 ms @V_{CC}=5V
- Watchdog timer can be disabled / enabled in STOP mode

15. Six 16 bits PWMs

- Six individual duty-adjustable, shared period-adjustable
- PWM clock source: System clock (Fsys), FIRC/256, FIRC (16 MHz), FIRC*2 (32 MHz)
- PWM0 supports complementary output (PWM0P, PWM0N)
- PWM0 output with dead-zone(non-overlap) time durations adjustable: (0~15)*(PWMCLK)
- PWM0N/0P/1/2/3/4/5 has two outputs
- Half-bridge phase control output

16. 12-bit ADC with 14 channels for External Pin Input and 2 channels for Internal Voltage

- Two internal voltage channels: VBG, 1/4VCC
- ADC reference voltage: V_{CC}, V_{BG} (1.2V), V_{BG} (2.56V) and V_{BG} (2V)
- PWM trigger ADC

17. Comparator

- Comparator x 1
  - With 7-bit DAC input
  - DAC reference voltage: V_{CC} or V_{BG} (1.20V or 2.56V)

18. Reset Sources

- Power On Reset
- Watchdog Timer Reset
- Low Voltage Reset
- External Pin Reset

19. Low Voltage Reset (LVR) and Low Voltage Detection (LVD)

- 15-Level Low Voltage Reset: 1.73V ~ 3.5V, can be disabled
- 15-Level Low Voltage Detection: 1.73V ~ 3.5V, can be disabled

20. Operating Voltage

- Fsys= 16 MHz, PWMCKS=FIRC*1, LVR~5.5V. Suggest LVR ≥ 2.30V

- Fsys= 8 MHz, PWMCKS=FIRC*1, LVR~5.5V. Suggest LVR ≥ 1.6V

  Note: Refer to the "Electrical Characteristics Graphs".

21. Operating Temperature Range : -40°C to + 105°C

22. Table Read Instruction: 16-bit ROM data lookup table

23. Integrated 16-bit Cyclic Redundancy Check (CRC) function

24. Instruction set: 39 Instructions

25. I/O ports:

- Maximum 18 programmable I/O pins
  - Open-Drain Output
  - CMOS Push-Pull Output
  - Schmitt Trigger Input with pull-up / pull-down resistor option(PA7 has no pull-down resistor)
  - All I/O with High-Sink except PA7
  - 1/2 V_{CC} (LCD 1/2 bias) Output (except PA7)
- All pin-change wake-up (falling edge and rising edge trigger) and interrupt

26. LCD Driver

- Maximum 17 software controlled COM
- LCD 1/2 bias

27. Programming connectivity support 5-wire (ICP) or 6-wire program

28. RDCTL: Read signal delay control for Program ROM

- **The user must switch this register to "4ns" to enhance the performance of minimal operating voltage**

29. Trimmed VBG1.2V/2V

- The users could move BG2TRIM to BGTRIM for exact 2V VBG.

30. ATD: Automatic transient detection(Read signal length control for Program ROM) to enhance the performance of power consumption at slow mode

31. Package Types: Please refer to the chapter of "PACKAGING INFORMATION"

32. Supported EV board

- TM56F1552/22

SYSTEM BLOCK DIAGRAM

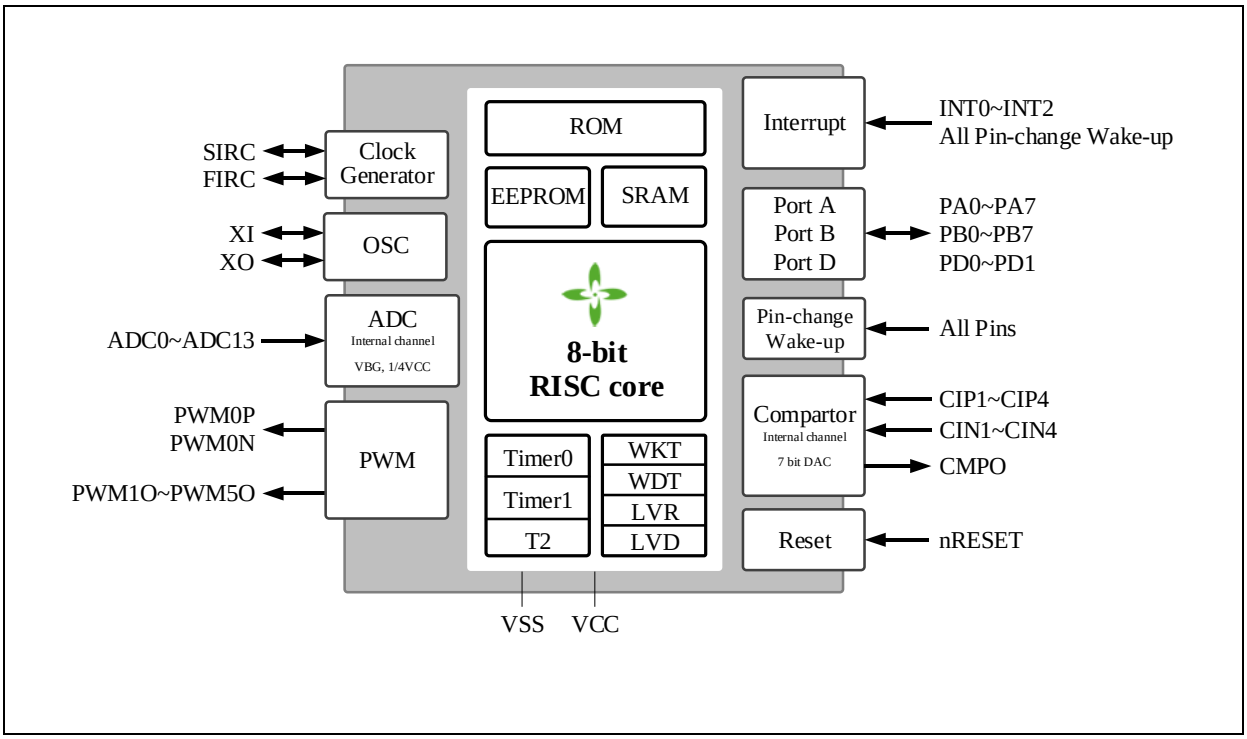

Block Diagram

PIN ASSIGNMENT DIAGRAM

Software initialization is necessary for the pads that are not bonded or unused.

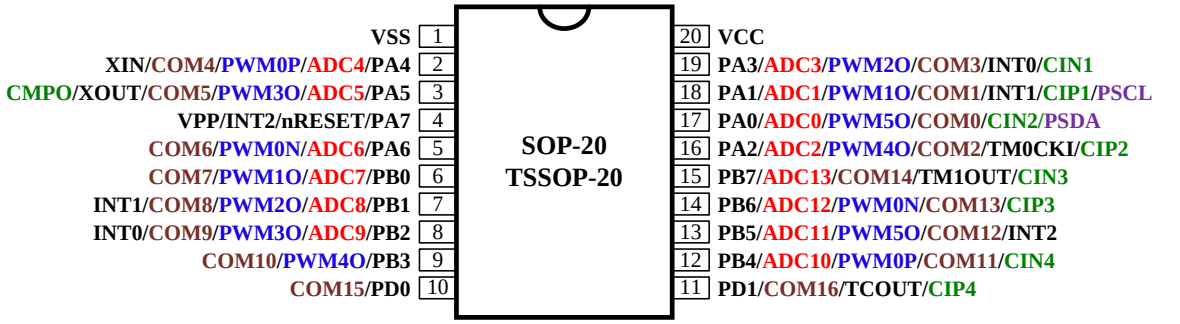

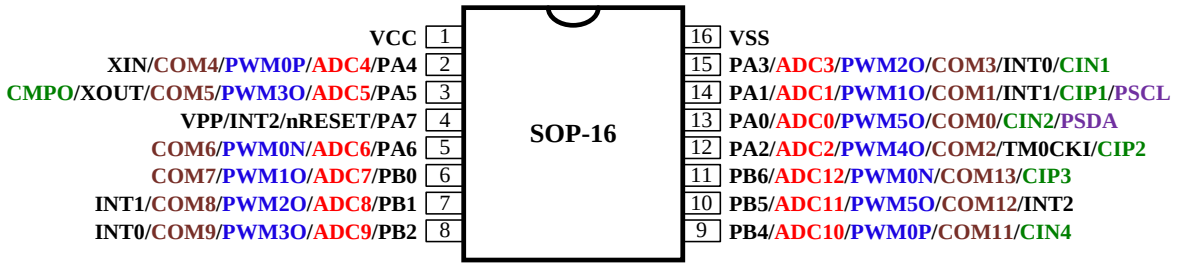

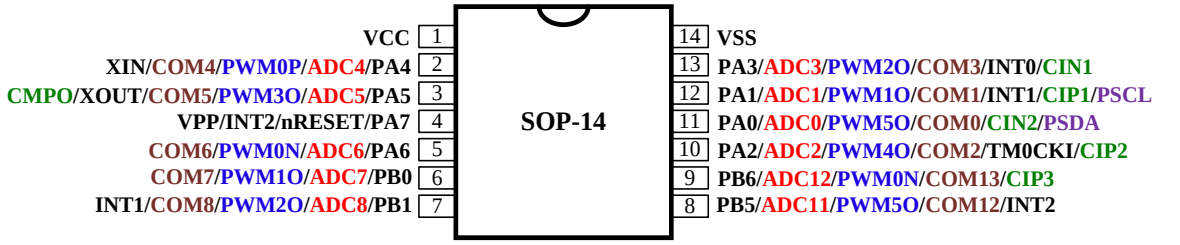

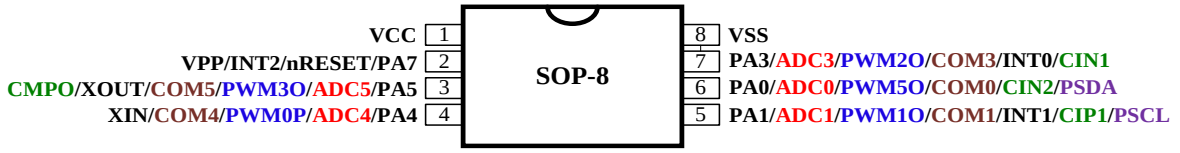

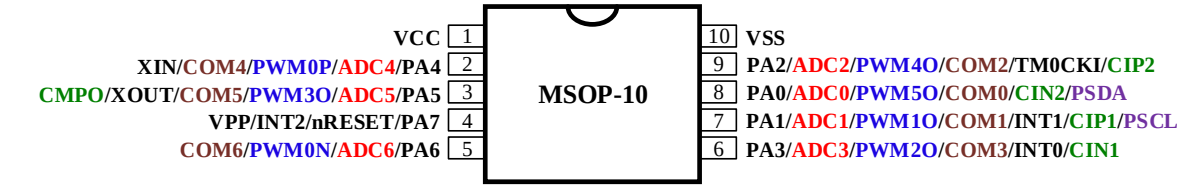

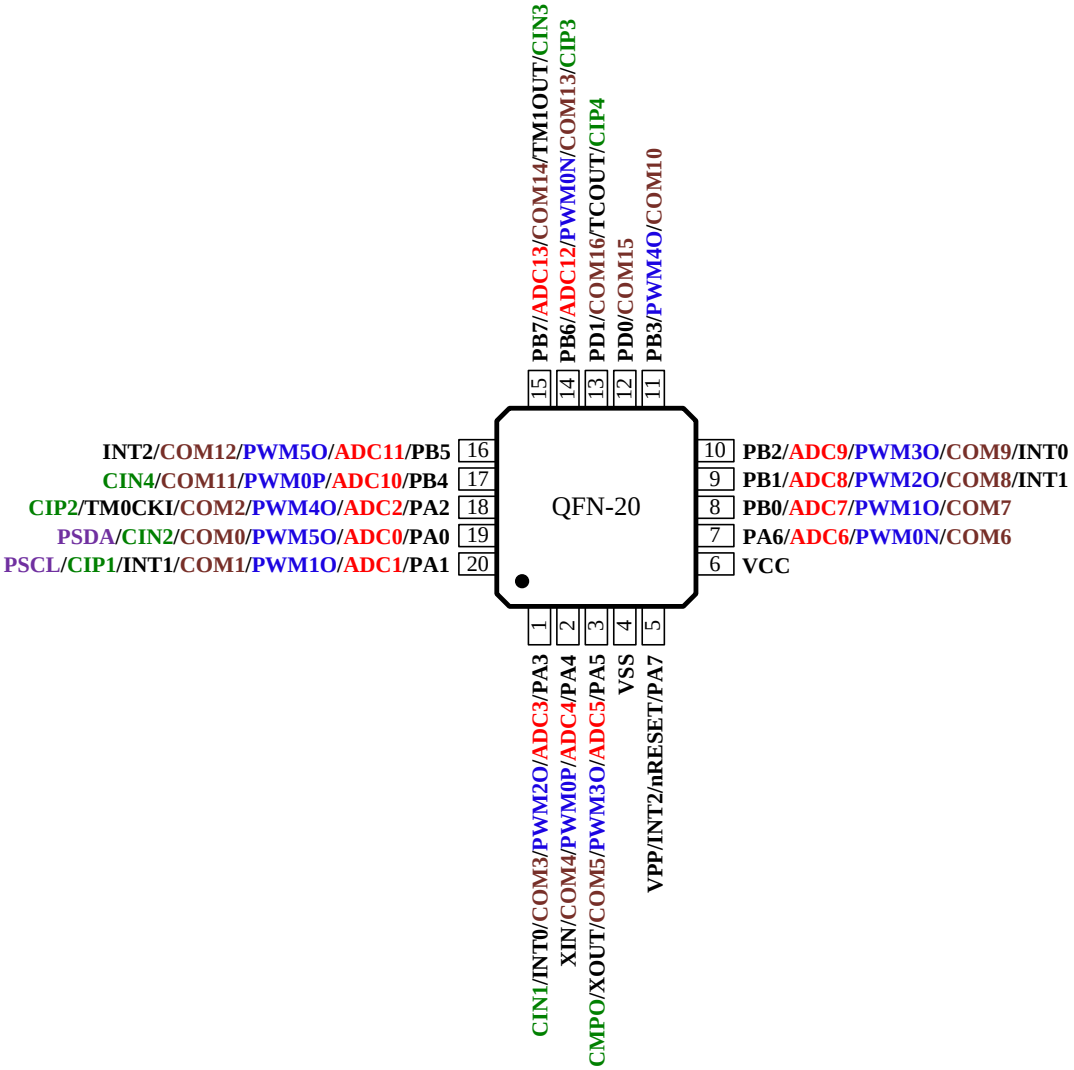
QFN-20
1 CIN1/INT0/COM3/PWM2O/ADC3/PA3
2 XIN/COM4/PWM0P/ADC4/PA4
3 CMPO/XOUT/COM5/PWM3O/ADC5/PA5
4 VSS
5 VPP/INT2/nRESET/PA7
6 VCC
7 PA6/ADC6/PWM0N/COM6
8 PB0/ADC7/PWM1O/COM7
9 PB1/ADC8/PWM2O/COM8/INT1
10 PB2/ADC9/PWM3O/COM9/INT0
11 PB3/PWM4O/COM10
12 PD0/COM15
13 PD1/COM16/TCOUT/CIP4
14 PB6/ADC12/PWM0N/COM13/CIP3
15 PB7/ADC13/COM14/TM1OUT/CIN3
16 INT2/COM12/PWM5O/ADC11/PB5
17 CIN4/COM11/PWM0P/ADC10/PB4
18 CIP2/TM0CKI/COM2/PWM4O/ADC2/PA2
19 PSDA/CIN2/COM0/PWM5O/ADC0/PA0
20 PSCL/CIP1/INT1/COM1/PWM1O/ADC1/PA1

PIN DESCRIPTIONS

Name	In/Out	Pin Description
PA0~PA7 PB0~PB7 PD0~PD1	I/O	Bit-programmable I/O port for Schmitt-trigger input, CMOS push-pull output, open-drain output or 1/2V_{CC}(LCD 1/2 bias) output. Pull-up/Pull-down resistors are assignable by software. **PA7 has no high-sink, 1/2 bias and resistor pull-down capability.**
nRESET	I	External active low reset
VCC, VSS	P	Power Voltage input pin and ground
VPP	I	Programming high voltage(9.5V) input(not applicable for EEPROM)
XIN, XOUT	–	Crystal/Resonator oscillator connection for System clock (FXT or SXT)
INT0~INT2	I	External interrupt input
TM0CKI	I	Timer0's input in counter mode
PWM0P	O	16 bits PWM0 positive output
PWM0N	O	16 bits PWM0 negative output
PWM1O~PWM5O	O	16 bits PWM1~PWM5 output
CMPO	O	Comparator status output
TCOUT	O	Fsys/2 clock output
TM1OUT	O	Timer1 overflow toggle output
ADC0~ADC13	I	ADC channel input
CIN1~CIN4	I	Comparator negative port input
CIP1~CIP4	I	Comparator positive port input
COM0~COM16	O	LCD 1/2 bias output
PSCL	I	Clock for programmer
PSDA	I/O	Data for programmer

Programming pins:

Normal mode (6-wire): VCC / VSS / PA0(PSDA) / PA1(PSCL) / PA5 / PA7(VPP)

ICP mode (5-wire): VCC / VSS / PA0(PSDA) / PA1(PSCL) / PA7(VPP) - When using ICP (In-Circuit Program) mode, the PCB needs to remove all components of PA0, PA1.

PIN SUMMARY

Pin Name	Type	GPIO							Alternate Function			
		Input				Output						
		Pull-up Control	Pull-down Control	Ext. Interrupt	Wake-up Interrupt	Open Drain	CMOS Push-Pull	1/2 V_{CC} (LCD 1/2 Bias)	PWM	ADC	Comparator	MISC
VCC	P											
PA4/ADC4 /PWM0P/COM4/XIN	I/O	●	●		●	●	●	●	●	●		XIN
PA5/ADC5 /PWM3O/COM5/XOUT/CMPO	I/O	●	●		●	●	●	●	●	●	●	XOUT
PA7/nRESET/INT2/VPP	I/O	●		●	●	●	●					nRESET/VPP
PA6/ADC6 /PWM0N/COM6	I/O	●	●		●	●	●	●	●	●		
PB0/ADC7 /PWM1O/COM7	I/O	●	●		●	●	●	●	●	●		
PB1/ADC8 /PWM2O/COM8/INT1	I/O	●	●	●	●	●	●	●	●	●		
PB2/ADC9 /PWM3O/COM9/INT0	I/O	●	●	●	●	●	●	●	●	●		
PB3 /PWM4O/COM10	I/O	●	●		●	●	●	●	●			
PD0/COM15	I/O	●	●		●	●	●	●				
PD1/COM16/TCOUT/CIP4	I/O	●	●		●	●	●	●			●	TCOUT
PB4/ADC10 /PWM0P/COM11/CIN4	I/O	●	●		●	●	●	●	●	●	●	
PB5/ADC11 /PWM5O/COM12/INT2	I/O	●	●	●	●	●	●	●	●	●		
PB6/ADC12 /PWM0N/COM13/CIP3	I/O	●	●		●	●	●	●	●	●	●	
PB7/ADC13 /COM14/TM1OUT/CIN3	I/O	●	●		●	●	●	●		●	●	TM1OUT
PA2/ADC2 /PWM4O/COM2/TM0CKI/ CIP2	I/O	●	●		●	●	●	●	●	●	●	TM0CKI
PA0/ADC0 /PWM5O/COM0/CIN2/PSDA	I/O	●	●		●	●	●	●	●	●	●	Programming
PA1/ADC1 /PWM1O/COM1/INT1/CIP1/PSCL	I/O	●	●	●	●	●	●	●	●	●	●	Programming
PA3/ADC3 /PWM2O/COM3/INT0/CIN1	I/O	●	●	●	●	●	●	●	●	●	●	
VSS	P											

FUNCTION DESCRIPTION

1 CPU Core

1.1 Program ROM (PROM)

The ROM of this device has an extra 32-Word INFO area to store the SYSCFG and an extra 256-Byte EEPROM. The ROM can be written multi-times and can be read as long as the PROTECT (CFGWH.15) bit of SYSCFG is not set. The SYSCFG can be read no matter PROTECT is set or cleared, but PROTECT bit can be cleared only when User ROM Code area is erased. On the other hand, if PROTECT bit is set, the user ROM code area will not be read by writer, and the user ROM code can't be updated until the PROTECT bit is cleared. The endurance of ROM is 1000 times @Vcc=5V/25℃。

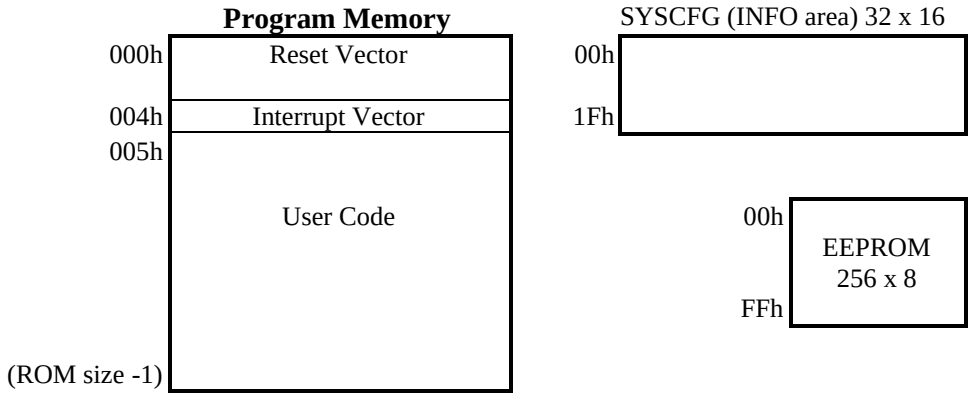

113h	Bit 7	Bit 6	Bit 5	Bit 4	Bit 3	Bit 2	Bit 1	Bit 0
RDCTL	–	–	–	–	–	–	RDCTL	
R/W	–	–	–	–	–	–	R/W	
Reset	–	–	–	–	–	–	1	0

113h.1~0 **RDCTL:** Read signal delay control for Program ROM
00: 16ns delay for read signal of Program ROM
01: 12ns delay for read signal of Program ROM
10: 8ns delay for read signal of Program ROM
11: 4ns delay for read signal of Program ROM
Change this register at slow clock for safety.
The user must switch this register to "4ns" to enhance the performance of minimal operating voltage.
This feature can't be emulated.

1.1.1 Reset Vector (000h)

After reset, system will restart the program counter (PC) at the address 000h, all registers will revert to the default value.

1.1.2 Interrupt Vector (004h)

When an interrupt occurs, the program counter (PC) will be pushed onto the stack and jumps to address 004h.

1.2 System Configuration Register (SYSCFG)

The System Configuration Register (SYSCFG) is located at INFO area; it contains a 16 bits register (CFGWH). The SYSCFG determines the option for initial condition of CPU. It is written by PROM Write only. User can select LVR operation mode and chip operation mode by SYSCFG register. The 15th bit of CFGWH is code-protected selection bit. If this bit is 1, the data in PROM will be protected when user reads PROM.

Bit		**15~0**	
Default Value		**0000_0110_0000_0000**	
Bit		Description	
CFGWH	15	**PROTECT**: Code protection selection	
		0	Disable
		1	Enable
	13-12	**WDTE**: WDT Reset Enable	
		0X	Disable
		10	Enable in FAST/SLOW mode, Disable in IDLE/STOP mode
		11	Always Enable
	11-8	**LVRS**: Low Voltage Reset Voltage Selection Please refer to the table of LVR voltage in the section of "LVR Circuit Characteristics". (Left click the link to go to that page)	
	7	**XRSTE**: External Pin (PA7) Reset Enable	
		0	Disable (PA7 as I/O pin)
		1	Enable
	5	**FIRCPSC**: FIRC Prescaler	
		0	Divided by 1 (16 MHz)
		1	Divided by 2 (8 MHz)
	4	**PORSEL**: POR duty cycle selection	
		0	POR enables at 100% duty cycle(POR is always on)
		1	POR enables at 1/16 duty cycle(This feature can't be emulated)(POR is only on at part of the time)
	3	**ATDOFF**: Automatic transient detection(Read signal length control for Program ROM)	
		0	ATD on(for power saving in SLOW mode)
		1	ATD off(recommend for EFT issue)
	2-0	tenx Reserved	

1.3 EEPROM

The Chip contains 256 bytes of data EEPROM memory. It is organized as a separate data space, in which single bytes can be read and written. According the physical characteristic the EEPROM need more long access time than Program ROM. Before the writing of EEPROM is complete, the main program can still continue to execute. EEPIF will become 1 after EEPROM write is completed and then the users could clear it. Before EEPIF is 1, no more writing or reading can be done to the EEPROM.

The EEPROM Read usage is same as use Table Read instruction except EEPROM enable bit must be set to high. By writing 0xE2 to register EEPEN (191h) can set the EEPROM enable bit, writing other value to EEPEN (191h) will clear the EEPROM enable bit. To access EEPROM, the DPTR[11:8] must be set to 0.

◇ Example: read EEPROM in assembly method

```
MOVLW   E2h
MOVWX   EEPEN       ; set EEPROM enable bit
CLRX    DPH         ; set DPH = 00h
```

```
MOVLW     23h      ;
MOVWX     DPL      ; set DPL = 23h, DPTR = 0023h
TABRL              ; W = TABR = data of EEPROM[23h]
                   ; read EEPROM data into W by using TABRL
```

◇ Example: read EEPROM in C language method

```
EEPEN=0xE2;   // set EEPROM enable bit
DPH=0;        // set DPH = 00h
DPL=0x23;     // set DPL = 23h, DPTR = 0023h
TABR=1;       // write 01h to TABR  = opcode TABRL
rData=TABR;   // rData = data of EEPROM[23h]
```

Note: When using C language to look up the table, the lookup table instruction can only be used outside the interrupt or within the interrupt, if the lookup table instruction is used inside and outside the interrupt, it may cause an error.

The EEPROM Write usage is similar to read EEPROM. When F/W writes data to the register EEPDT (192h), the data will also be written to EEPROM. EEPROM writing requires typ 4ms@V_{CC}=2.5V/25℃, 1.5ms@V_{CC}=5V/25℃. This Chip has a build-in EEPROM Time-out function for escaping write fail state. EEPROM writing needs V_{CC}>2.5V. Before the writing of EEPROM is complete, the main program can still continue to execute. EEPIF will become 1 after EEPROM write is completed and then the users could clear it. Before EEPIF is 1, no more writing or reading can be done to the EEPROM. **To clear watchdog first before writing EEPROM to avoid watchdog timer reset during writing procedure for safety.**

◇ Example: write EEPROM data A5 to address 23h

```
ORG       0h
          LGOTO     WREEP
ORG       4h
Interrupt:
                    ;Save WREG/STATUS
          BTXSS     EEPIE       ;check EEPIE
          LGOTO     $+3         ;check EEPROM write time-out flag
          BTXSC     EEPIF       ;check EEPIF
          LGOTO     EEPINT
          :
          LGOTO     IntEnd

EEPINT:
          BTXSC     EEPTO       ;check EEPROM write time-out flag
          BSX       RAM21,1     ;set RAM21,1 eep Write Timeout (fail)
RDEEP:
          TABRL                 ;W = TABR = data of EEPROM[23h]
          MOVWX     RAM20       ;RAM20 = data of EEPROM[23h]
          CLRX      EEPEN       ;clear EEPROM enable bit
          MOVLW     DFh
          MOVWX     INTIF1      ;clear EEPIF
          BSX       RAM21,0     ;set RAM21,0 (EEPIF)
          :
IntEnd:
                    ;Restore STATUS/WREG
          RETI

          ORG       100h
WREEP:
          CLRX      INTIE       ; disable INTIE
```

```
CLRX        INTIE1          ; disable INTIE1
CLRX        RAM20
CLRX        RAM21
MOVLW       DFh
MOVWX       INTIF1          ;clear EEPIF
BSX         EEPIE           ;enable EEPIE Interrupt
MOVLW       00000011b
MOVWX       EEPCTL          ;set EEPROM write with 62.5ms time out
CLRX        DPH             ;set DPH = 00h
MOVLW       23h
MOVWX       DPL             ;set DPL = 23h, DPTR = 0023h
CLRWDT                      ;To clear WDT first before writing EEPROM
MOVLW       E2h
MOVWX       EEPEN           ;set EEPROM enable bit
MOVLW       A5h
MOVWX       EEPDT           ;write A5h to EEPDT
                            ;the data also save to EEPROM @Address 23h
BTXSS       RAM21,0         ;check RAM21,0 (EEPIF)
LGOTO       $-1
BTFSC       RAM21,1         ;check RAM21,1 eep Write Timeout (fail)
LGOTO       WREEP

MOVXW       RAM20
XORLW       A5h
BTXSS       STATUS, 2       ;Check RAM20 = A5h
LGOTO       WREEP
:
```

1.3.1 The Precaution of EEPROM Programming

1.3.1.1 The Programming Characteristics of EEPROM

(1) The EEPROM programming time is not fixed, and programming different data requires different times.
(2) The programming time is affected by voltage, temperature, and whether the data is inverted. The programming time is longer for higher temperatures, lower VCC and larger number of data inversion.
(3) This chip has a built-in EEPROM write time-out function to protect the write timeout and ensure that the system can execute the program normally.
(4)VPP could be VCC, VSS or floating when EEPROM is programming.

1.3.1.2 EEPROM Write Endurance

The number of EEPROM programming cycle is related to voltage and temperature. The write endurance is at least 30,000(2.5V < VCC < 5.5V, -20℃~85℃). Please refer to the table of “EEPROM Characteristics” in the chapter of “ELECTRICAL CHARACTERISTICS”.

1.3.1.3 EEPROM Write Verification

Depending on the specific application, it is generally required to read back the data written into EEPROM for verification.

1.3.1.4 Protection against Miswriting

When a write operation is initiated, the following operations can prevent miswriting operations:
(1) Low voltage detection: when writing EEPROM, VCC must be >2.5V, you can use the LVD function to monitor the voltage
(LVD monitoring voltage is recommended to be 3.5V to prevent power outage and allow sufficient time for writing EEPROM)
(2) Clear the watchdog (WDT) every time a byte is written to prevent the watchdog from being reset when multiple bytes are written sequentially.
(3) When writing data, temporarily turn off all of the interrupt and resume them after the completion of writing.

(4) Software failure: add EEPROM read-back mechanism to the program to ensure that data is written correctly.
(5) Timeout protection: enable the write timeout function (EEPTE) in the program to protect the system from getting stuck when write time-out occurred.
(6) To reduce power supply glitches: connect capacitors between VCC and GND to stabilize the system power supply.
(7) Before writing another byte, it is necessary to confirm that EEPIF=0.

0Dh	Bit 7	Bit 6	Bit 5	Bit 4	Bit 3	Bit 2	Bit 1	Bit 0
INTIE1	–	PCIE	EEPIE	CMPIE	–	–	PWMIE	LVDIE
R/W	–	R/W	R/W	R/W	–	–	R/W	R/W
Reset	–	0	0	0	–	–	0	0

0Dh.5 **EEPIE:** EEPROM interrupt enable
0: disable
1: enable

0Eh	Bit 7	Bit 6	Bit 5	Bit 4	Bit 3	Bit 2	Bit 1	Bit 0
INTIF1	–	PCIF	EEPIF	CMPIF	–	–	PWMIF	LVDIF
R/W	–	R/W	R/W	R/W	–	–	R/W	R/W
Reset	–	0	0	0	–	–	0	0

0Eh.5 **EEPIF:** EEPROM interrupt event pending flag
This bit is set by H/W when EEPROM writing is finishing or time-out event occurred. Writing DFh to INTIF1 will clear this flag.

190h	Bit 7	Bit 6	Bit 5	Bit 4	Bit 3	Bit 2	Bit 1	Bit 0
EEPCTL	EEPTO	–	–	–	–	–	EEPTE	
R/W	R	–	–	–	–	–	R/W	
Reset	0	–	–	–	–	–	0	0

190h.7 **EEPTO**: EEPROM write time-out flag
0: EEPROM write no time-out
1: EEPROM write is time-out. EEPTO will be cleared when EEPEN is disabled.
190h.1~0 **EEPTE**: EEPROM write time-out enable (access wait time)
00: Disable
01: 2 ms@5.0V, 2.5 ms@3.0V
10: 7.8 ms@5.0V, 10 ms@3.0V
11: 62.5 ms@5.0V, 79.6 ms@3.0V

191h	Bit 7	Bit 6	Bit 5	Bit 4	Bit 3	Bit 2	Bit 1	Bit 0
EEPEN	EEPEN							
R/W	W							
Reset	0	0	0	0	0	0	0	0

191h.7~0 **EEPEN**: EEPROM access enable
Write 0xE2 to this register will enable EEPROM access
Write others value to this register will disable EEPROM access

192h	Bit 7	Bit 6	Bit 5	Bit 4	Bit 3	Bit 2	Bit 1	Bit 0
EEPDT	EEPDT							
R/W	W							
Reset	0	0	0	0	0	0	0	0

192h.7~0 **EEPDT**: EEPROM data to write
Write data to this register will let H/W write the data to EEPROM when EEPROM access is enable.
note: To clear watchdog first before writing EEPROM to avoid watchdog timer reset during

writing procedure for safety.

1.4 RAM Addressing Mode

There is one Data Memory Plane in CPU. The Plane is partitioned into four banks. Each bank extends up to 7Fh (128 bytes). The lower locations of each bank are reserved for Special Function Register (SFR). Above the SFR are General Purpose Registers, implemented as static RAM. All implemented banks contain Special Function Registers. Some frequently used Special Function Registers from one bank may be mirrored in another bank for code reduction and quicker access.

Bit RP1 and RP0 (STATUS[6:5]) are the bank select bits.

[RP1, RP0]	BANK
00	0
01	1
10	2
11	3

The plane can be addressed directly or indirectly. The INDF register is not a physical register. Addressing the INDF register will cause indirect addressing. Indirect addressing is possible by using the INDF register. Any instruction using the INDF register actually accesses the register pointed to by File Select Register, FSR. Reading the INDF register itself, indirectly (FSR = '0') will read 00h. Writing to the INDF register indirectly (FSR = '0') results in a no operation (although status bit may be affected). An effective 9-bit address is obtained by concatenating the 8-bit FSR register and the IRP bit (STATUS[7]). Refer to the figure below.

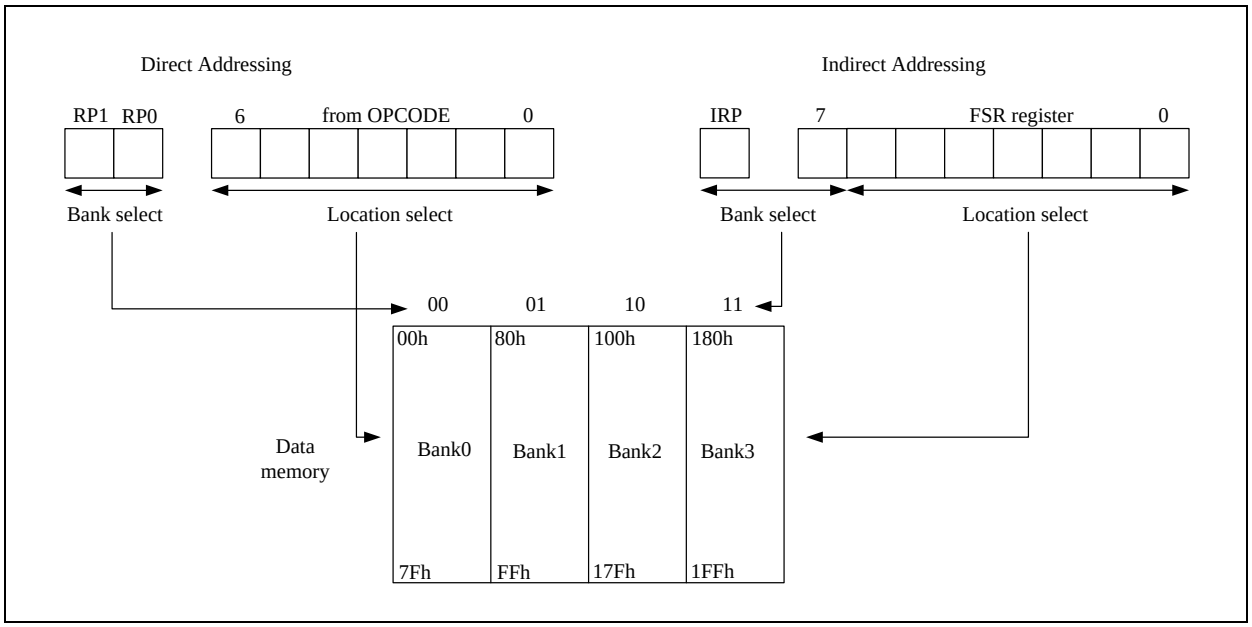

Direct / Indirect Addressing

Keeping RP0=RP1=0 in the beginning of the F/W code and using the new instruction set.
The advantage of using new instruction is user can ignore the bank location of registers and the code size can be saved. The new instruction is almost the same as the old instruction. By replacing the "F" to "X" in the instruction set can easily use the new instruction without switching the bank.

For example:

BC**F**	TM0IE	➔	BC**X**	TM0IE
DEC**F**	CNT, 1	➔	DEC**X**	CNT, 1
INC**F**SZ	RAM25, 0	➔	INC**X**SZ	RAM25, 0
MOVW**F**	PAMOD10	➔	MOVW**X**	PAMOD10
RL**F**	RAMA0, 0	➔	RL**X**	RAMA0, 0
SWAP**F**	ADCTL, 0	➔	SWAP**X**	ADCTL, 0

	【BANK0】 000~07Fh		【BANK1】 080h~0FFh		【BANK2】 100h~17Fh		【BANK3】 180h~1FFh
000h	**INDF**	080h	**INDF**	100h	**INDF**	180h	**INDF**
001h	TM0	081h	OPTION	101h	TM0	181h	OPTION
002h	**PCL**	082h	**PCL**	102h	**PCL**	182h	**PCL**
003h	**STATUS**	083h	**STATUS**	103h	**STATUS**	183h	**STATUS**
004h	**FSR**	084h	**FSR**	104h	**FSR**	184h	**FSR**
005h	PAD	085h	PAMOD10	105h	PINMOD	185h	DPL
006h	PBD	086h	PAMOD32	106h		186h	DPH
007h	PDD	087h	PAMOD54	107h	PWMCTL2	187h	CRCDL
008h		088h	PAMOD76	108h		188h	CRCDH
009h		089h	PWMCTL	109h	LVRPD	189h	CRCIN
00Ah	**PCLATH**	08Ah	**PCLATH**	10Ah	**PCLATH**	18Ah	**PCLATH**
00Bh	**INTIE**	08Bh	**INTIE**	10Bh	**INTIE**	18Bh	**INTIE**
00Ch	INTIF	08Ch	PBMOD10	10Ch	PCH	18Ch	TABR
00Dh	INTIE1	08Dh	PBMOD32	10Dh		18Dh	CMPCTL
00Eh	INTIF1	08Eh	PBMOD54	10Eh	BGTRIM	18Eh	CMPPNS
00Fh	CLKCTL	08Fh	PBMOD76	10Fh	IRCF	18Fh	DACTL
010h	TM0RLD	090h	PDMOD10	110h		190h	EEPCTL
011h	TM0CTL	091h	OPTION2	111h	BG2TRIM	191h	EEPEN
012h	TM1	092h	PWMPRDH	112h		192h	EEPDT
013h	TM1RLD	093h	PWMPRDL	113h	RDCTL	193h	
014h	TM1CTL	094h	PWM0DH	114h		194h	
015h	T2CTL	095h	PWM0DL	115h	SIRCF	195h	
016h	LVCTL	096h	PWM1DH	116h		196h	
017h	ADCDH	097h	PWM1DL	117h		197h	
018h	ADCTL	098h	PWM2DH	118h		198h	
019h	ADCTL2	099h	PWM2DL	119h		199h	
01Ah		09Ah	PWM3DH	11Ah		19Ah	
01Bh		09Bh	PWM3DL	11Bh		19Bh	
01Ch		09Ch	PWM4DH	11Ch		19Ch	
01Dh		09Dh	PWM4DL	11Dh		19Dh	
01Eh		09Eh	PWM5DH	11Eh		19Eh	
01Fh		09Fh	PWM5DL	11Fh		19Fh	
020h 06Fh	RAM Bank0 area (80 Bytes)	0A0h 0EFh	RAM Bank1 area (80 Bytes)	120h 16Fh	RAM Bank2 area (80 Bytes)	1A0h 1EFh	Don't Use
070h 07Fh	**common area (16 Bytes)**	0F0h 0FFh	**accesses 070h~07Fh**	170h 17Fh	**accesses 070h~07Fh**	1F0h 1FFh	**accesses 070h~07Fh**

◇ Example: read / write register by using direct addressing **(force RP0=RP1=0)**

```
CLKCTL      equ     00Fh        ; SFR in Bank0
TM1         equ     012h        ; SFR in Bank0
OPTION2     equ     091h        ; SFR in Bank1
LVRPD       equ     109h        ; SFR in Bank2
IRCF        equ     10Fh        ; SFR in Bank2
DPL         equ     185h        ; SFR in Bank3
RAM020      equ     020h        ; RAM in Bank0
RAM0A0      equ     0A0h        ; RAM in Bank1

MOVXW       TM1                 ; read TM1 (Bank0) to W
MOVXW       OPTION2             ; read OPTION2 (Bank1) to W
MOVXW       IRCF                ; read IRCF (Bank2) to W
MOVXW       DPL                 ; read DPL (Bank3) to W

MOVLW       16h                 ; W = 16h
MOVWX       RAM020              ; RAM[0x020] = W = 16h
MOVWX       RAM0A0              ; RAM[0x0A0] = W = 16h

MOVLW       37h                 ; W = 37h
MOVWX       LVRPD               ; LVRPD = W = 37h, force LVR/POR disable

MOVXW       CLKCTL              ; read SFR CLKCTL (00Fh) to W
MOVXW       IRCF                ; read SFR IRCF (10Fh) to W

MOVLW       0Bh                 ; W = 0Bh
MOVWX       CLKCTL              ; CLKCTL (00Fh) = W = 0Bh
MOVWX       IRCF                ; IRCF (10Fh) = W = 0Bh
```

◇ Example: read / write register by using indirect addressing **(force RP0=RP1=0)**

```
BSX         IRP                 ; IRP = 1 => Bank2/3
MOVLW       0Fh                 ; W = 0Fh
MOVWX       FSR                 ; FSR = W = 0Fh
MOVXW       INDF                ; read SFR IRCF (10Fh) to W

BSX         IRP                 ; IRP = 1 => Bank2/3
MOVLW       0Fh                 ; W = 0Fh
MOVWX       FSR                 ; FSR = W = 0Fh
MOVLW       0Bh                 ; W = 0Bh
MOVWX       INDF                ; IRCF (10Fh) = W = 0Bh

BCX         IRP                 ; IRP = 0 => Bank0/1
MOVLW       0Fh                 ; W = 0Fh
MOVWX       FSR                 ; FSR = W = 0Fh
MOVXW       INDF                ; read SFR CLKCTL (00Fh) to W

BCX         IRP                 ; IRP = 0 => Bank0/1
MOVLW       0Fh                 ; W = 0Fh
MOVWX       FSR                 ; FSR = W = 0Fh
MOVLW       0Bh                 ; W = 0Bh
MOVWX       INDF                ; CLKCTL (00Fh) = W = 0Bh
```

1.5 Programming Counter (PC) and Stack

The Programming Counter is 12-bit wide. As a program instruction is executed, the PC will contain the address of the next program instruction to be executed. The PC value is normally increased by one except for the following cases. The Reset Vector (000h) and the Interrupt Vector (004h) are provided for PC initialization and Interrupt. For CALL/GOTO instruction, PC loads lower 11 bits address from instruction word and upper 1 bit from PCLATH[3]. For RET/RETI/RETLW instruction, PC retrieves its content from the top level STACK.

Before CALL/GOTO instruction is executed, the PCLATH[3] must be set if the destination address more than 2K, otherwise the PCLATH[3] must be cleared. Similar as RAM Addressing Mode (refer section 1.3), the Chip provides new instruction set LCALL/LGOTO to replace CALL/GOTO instruction set. When using LCALL/LGOTO, user don't care about the destination address, just only keep PCLATH[3] cleared.

The low byte data of the Programming Counter (PC[7:0]) can be read and written by PCL register (002h/082h/102h/182h). The high byte data of Programming Counter (PC[11:8]) can only be read by PCH register (10Ch). The internal flag PCH_S is used to select the source of PCH, when executing any instruction with the PCL register as the destination. Write 0x1C to PCH register can set PCH_S, write others value to PCH register will clear PCH_S. After reset, the PCH_S is cleared.

When PCH_S is cleared to '0', executing any instruction with the PCL register as the destination simultaneously causes PCH to be replaced by the contents of the PCLATH (00Ah/08Ah/10Ah/18Ah) register. This allows the entire contents of the program counter to be changed by writing the desired high byte to the PCLATH register. When the low byte is written to the PCL register, all contents of program counter will change to the values contained in the PCLATH register and those being written to the PCL register.

When PCH_S is set to '1', executing any instruction with the PCL register as the destination the low byte is written to the PCL register and will not change the PCH. It is recommended to setting PCH_S to '1' when using any instruction with the PCL register as the destination, but C language doesn't support this function.

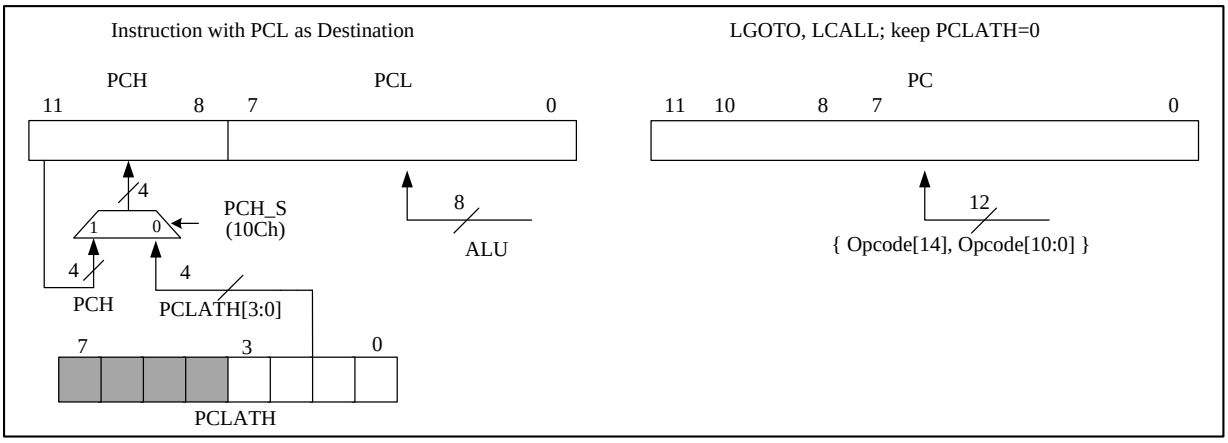

002h	Bit 7	Bit 6	Bit 5	Bit 4	Bit 3	Bit 2	Bit 1	Bit 0
PCL	PCL							
R/W	R/W							
Reset	0	0	0	0	0	0	0	0

002h.7~0 **PCL:** Programming Counter data bit 7~0

00Ah	Bit 7	Bit 6	Bit 5	Bit 4	Bit 3	Bit 2	Bit 1	Bit 0
PCLATH	GPR				PCLATH			
R/W	R/W				R/W			
Reset	0	0	0	0	0	0	0	0

00Ah.3~0 **PCLATH:** Programming Counter high byte data when instruction with PCL as destination is executed, and PCH_S is cleared

00Ah.3 **PCLATH:** Programming Counter upper 1 bit when CALL/GOTO instruction is executed
Note: When using LCALL/LGOTO instruction must keep cleared

10Ch	Bit 7	Bit 6	Bit 5	Bit 4	Bit 3	Bit 2	Bit 1	Bit 0
PCH	PCH							
R/W	W				R/W			
Reset	0	0	0	0	0	0	0	0

10Ch.7~0 **PCH (W):** Programming Counter high byte source selection when instruction with PCL as destination is executed
write 0x1C to set PCH_S = 1: PCH keep the original value
write others to clear PCH_S = 0: PCH is from PCLATH

10Ch.3~0 **PCH (R):** Programming Counter data bit 11~8

The STACK is 12-bit wide and 8-level in depth. The LCALL instruction and hardware interrupt will push STACK level in order, while the RET/RETI/RETLW instruction pops STACK level in order. For table lookup, the device offer the powerful table read instructions TABRL, TABRH to return the 16-bit ROM data into W register by setting DPTR={DPH, DPL} registers. It also offers another way to read the16-bit ROM data into W register by setting TABR (18Ch) for C language.

◇ Example: To look up the PROM data located RETLW.

```
ORG     000h                    ;  Reset Vector
        LGOTO   START

START:
        MOVLW   00h
        MOVWX   RAM020          ; Set lookup table's address
        MOVLW   1Ch             ; Write 1Ch to PCH to set PCH_S flag
        MOVWX   PCH
LOOP:
        MOVXW   RAM020          ; Move index value to W register
        LCALL   TABLE1          ; To lookup data
        …
        INCX    RAM020, 1       ; Increment the index address for next address
        …
        LGOTO   LOOP            ; Go to LOOP label
        …
ORG     X00h
TABLE1:
        ADDWX   PCL, 1          ; Add the W with PCL, the result back in PCL.
        RETLW   55h             ; W=55h when return
        RETLW   56h             ; W=56h when return
        RETLW   58h             ; W=58h when return
```

Note: The chip define 256 ROM address as one page, so that ROM has 16 pages, 000h~0FFh, 100h~1FFh, …, F00h~FFFh. On the other words, PC[11:8] can be define as page. A lookup table must

be located at the same page to avoid getting wrong data. Thus, the lookup table has maximum 255 data for above example with starting a lookup table at X00h (X = 1, 2, 3, …, E, F). If a lookup table has fewer data, it needs not setting the starting address at X00h, but only confirms all lookup table data are located at the same page.

◇ Example: To look up the PROM data located using TABRL / TABRH in assembly method.

```
            MOVLW     (TABLE2 >>8) & 0xff
            MOVWX     DPH
            MOVLW     (TABLE2) & 0xff
            MOVWX     DPL                    ; DPTR = {DPH, DPL} = TABLE2
; Table Read by instructions TABRL / TABRH
            TABRL                            ; Read PROM low byte data to W (W = 86h)
            TABRH                            ; Read PROM high byte data to W (W = 19h)
            …

TABLE2:
            .DT       0x1986                 ; 16-bit ROM data
            …
```

◇ Example: To look up the PROM data located using TABR register in C language method.

```
; Table Read by SFR TABR
            const unsigned int TABLE[]={0x1234};
            DPL = &TABLE;
            DPH = &TABLE >> 8;
            TABR=1;                          // write 01h to TABR  = opcode TABRL
                                             // TABR= low byte data of TABLE[0] =34h
            rData1=TABR;                     // rData1 = TABR= low byte data of TABLE[0] =34h
            TABR=2;                          // write 02h to TABR  = opcode TABRH
                                             // TABR= high byte data of TABLE[0] =12h
            rData2=TABR;                     // rData2 = TABR= high byte data of TABLE[0] =12h
```

Note: When using TABR register in C language to look up the table, the lookup table instruction can only be used outside the interrupt or within the interrupt, if the lookup table instruction is used inside and outside the interrupt, it may cause an error.

18Ch	Bit 7	Bit 6	Bit 5	Bit 4	Bit 3	Bit 2	Bit 1	Bit 0
TABR	TABR							
R/W	R/W							
Reset	0	0	0	0	0	0	0	0

18Ch.7~0 The TABR register is used for lookup tables when using the C language as following step.
1. TABR write 01h to get PROM low byte data to W and TABR register (as instruction TABRL)
2. TABR write 02h to get PROM high byte data to W and TABR register (as instruction TABRH)
3. After step.1 or step.2, read TABR to get main ROM table read value
4. After step.1 or step.2, read TABR to get main ROM table read value for C language

Table Read for ASM: Support instruction TABRL / TABRH or register TABR. Suggest not using the method of register TABR. SFR HWAUTO=1 is also suggested.
Table Read for C: using register TABR. Only be used outside or inside the interrupt service routine. Don't utilize it inside and outside interrupt service routine simultaneously. Otherwise, something will be wrong.

1.5.1 ALU and Working (W) Register

The ALU is 8-bit wide and capable of addition, subtraction, shift and logical operations. In two-operand instructions, typically one operand is the W register, which is an 8-bit non-addressable register used for ALU operations. The other operand is either a file register or an immediate constant. In single operand instructions, the operand is either W register or a file register. Depending on the instruction executed, the ALU may affect the values of Carry (C), Digit Carry (DC), and Zero (Z) Flags in the STATUS register. The C and DC flags operate as a /Borrow and /Digit Borrow, respectively, in subtraction.

Note: /Borrow represents inverted of Borrow register.
/Digit Borrow represents inverted of Digit Borrow register.

1.5.2 STATUS Register (003h/083h/103h/183h)

This register contains the arithmetic status of ALU and the Reset status. The STATUS register can be the destination for any instruction, as with any other register. If the STATUS register is the destination for an instruction that affects the Z, DC or C bits, then the write to these three bits is disabled. These bits are set or cleared according to the device logic. It is recommended, therefore, that only BCX, BSX and MOVWX instructions are used to alter the STATUS Register because these instructions do not affect those bits.

STATUS	Bit 7	Bit 6	Bit 5	Bit 4	Bit 3	Bit 2	Bit 1	Bit 0
Reset Value	0	0	0	0	0	0	0	0
R/W	R/W	R/W	R/W	R	R	R/W	R/W	R/W

Bit	Description	
7	**IRP**: Register Bank Select bit (used for indirect addressing) 0 = Bank 0,1 (000h - 0FFh) 1 = Bank 2,3 (100h - 1FFh)	
6:5	**RP1:RP0**: Register Bank Select bits (used for direct addressing) 00 = Bank 0 (000h - 07Fh) 01 = Bank 1 (080h - 0FFh) 10 = Bank 2 (100h - 17Fh) 11 = Bank 3 (180h - 1FFh) Each bank is 128 bytes	
4	**TO**: Time Out Flag 0: after Power On Reset or CLRWDT/SLEEP instruction 1: WDT time out occurs	
3	**PD**: Power Down Flag 0: after Power On Reset or CLRWDT instruction 1: after SLEEP instruction	
2	**Z**: Zero Flag 0: the result of a logic operation is not zero 1: the result of a logic operation is zero	
1	**DC**: Decimal Carry Flag or Decimal / Borrow Flag	
	ADD instruction	SUB instruction
	0: no carry 1: a carry from the low nibble bits of the result occurs	0: a borrow from the low nibble bits of the result occurs 1: no borrow
0	**C**: Carry Flag or /Borrow Flag	
	ADD instruction	SUB instruction
	0: no carry 1: a carry occurs from the MSB	0: a borrow occurs from the MSB 1: no borrow

◇ Example: Write immediate data into STATUS register.

```
MOVLW    00h
MOVWX    STATUS          ; Clear STATUS register
```

◇ Example: Bit addressing set and clear STATUS register.

```
BSX      STATUS, 0       ; Set C=1
BCX      STATUS, 0       ; Clear C=0
```

◇ Example: Determine the C flag by BTXSS instruction.

```
BTXSS    STATUS, 0       ; Check the carry flag
LGOTO    LABEL_1         ; If C=0, goto LABEL_1
LGOTO    LABEL_2         ; If C=1, goto LABEL_2
```

2 Reset

This device can be RESET in four ways.

- Power-On-Reset (POR)
- Low Voltage Reset (LVR)
- External Pin Reset (XRST)
- Watchdog Timer Reset (WDTR)

Resets can be caused by Power on Reset (POR), External Pin Reset (XRST), Watchdog Timer Reset (WDTR), or Low Voltage Reset (LVR). The CFGWH controls the Reset functionality. After Reset, the SFRs are returned to their default value, the program counter (PC) is cleared, and the system starts running from the reset vector 000h place. The TO and PD flags at status register (STATUS) are indicate system reset status.

2.1 Power on Reset (POR)

After Power-On-Reset, all system and peripheral control registers are then set to their default hardware Reset values.

2.2 Low Voltage Reset (LVR)

The Low Voltage Reset features static reset when supply voltage is below a threshold level. There are 15 threshold levels can be selected. The LVR's operation mode is defined by the CFGWH register. Please refer to the table of LVR voltage in the chapter of Electrical Characteristics. Vcc must be below maximum operating voltage and above LVR voltage. The user must consider the minimal operating voltage of corresponding operating frequency such that LVR voltage must be above minimum operating voltage.

Different F_{sys} have different system minimum operating voltage, reference to Operating Voltage of DC characteristics, if current system voltage is low than minimum operating voltage and lower LVR is selected, then the system maybe enters dead-band and error occurs.

16h	Bit 7	Bit 6	Bit 5	Bit 4	Bit 3	Bit 2	Bit 1	Bit 0
LVCTL	LVDF	LVDHYS	LVRSAV	LVDSAV	LVDS			
R/W	R	R/W	R/W	R/W	R/W			
Reset	0	0	1	1	0	0	0	0

16h.5 **LVRSAV**: POR/LVR auto power off in STOP/IDLE mode
0: disable POR/LVR auto power off in STOP/IDLE mode
1: enable POR/LVR auto power off in STOP/IDLE mode

2.3 External Pin Reset (XRST)

The External Pin Reset (XRST) can be disabled or enabled by XRSTE at CFGWH register. External pin reset should be kept low for at least 2 SIRC clock cycles to ensure reset can active. The External Pin Reset also sets all the control registers to their default value but the TO/PD flags will not affected by these resets.

External reset pin (nRESET) is low level active. The system is running when reset pin is high level voltage input. The reset pin receives the low voltage and the system is reset. The external reset can reset

the system during power on duration, and good external reset circuit can protect the system to avoid operating at inappropriate power condition.

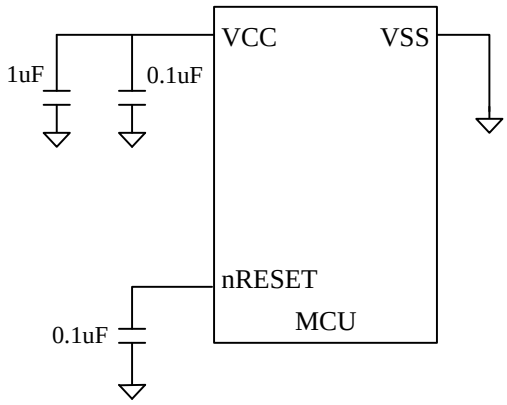

2.4 Watchdog Timer Reset (WDTR)

The WDT reset can be disabled or enabled through the CFGWH register. Set WDTPSC to define the period during which WDT reset occurs. WDT reset counter can be cleared by device Reset or CLRWDT bit. WDT reset also set all the control registers to their default value. The TO/PD flags are not affected by WDT resets.

◇ Example: Defining Reset Vector

```
        ORG     000h            ; Reset Vector
        LGOTO   START           ; Jump to user program address.

        ORG     010h
START:
        …                       ; 010h, The head of user program
        …
        LGOTO   START
```

3 Clock Circuitry and Operation Mode

3.1 System Clock

The device is designed with dual-clock system. There are four kinds of clock source, FXT (Fast Crystal) Clock, SXT (Slow Crystal) Clock, SIRC (Slow Internal RC) Clock and FIRC (Fast Internal RC) Clock. Each clock source can be applied to CPU kernel as system clock. When in IDLE mode, the Slow-clock (SIRC or SXT) can be configured to keep oscillating to provide clock source to T2 block, or the SIRC provides clock source to WKT/WDT block. Refer to the Figure as below.

After Reset, the device is running at SLOW mode with SIRC. S/W should select the proper clock rate for chip operation safety. The higher V_{CC} allows the chip to run at a higher System clock frequency. In a typical condition, a 16 MHz System clock rate requires V_{CC} > 2V@(25℃).

The CLKCTL (0Fh) SFR controls the System clock operating. H/W automatically blocks the S/W abnormally setting for this register. Never to write both FASTSTP=1 and CPUCKS=1. It is recommended to write this SFR bit by bit.

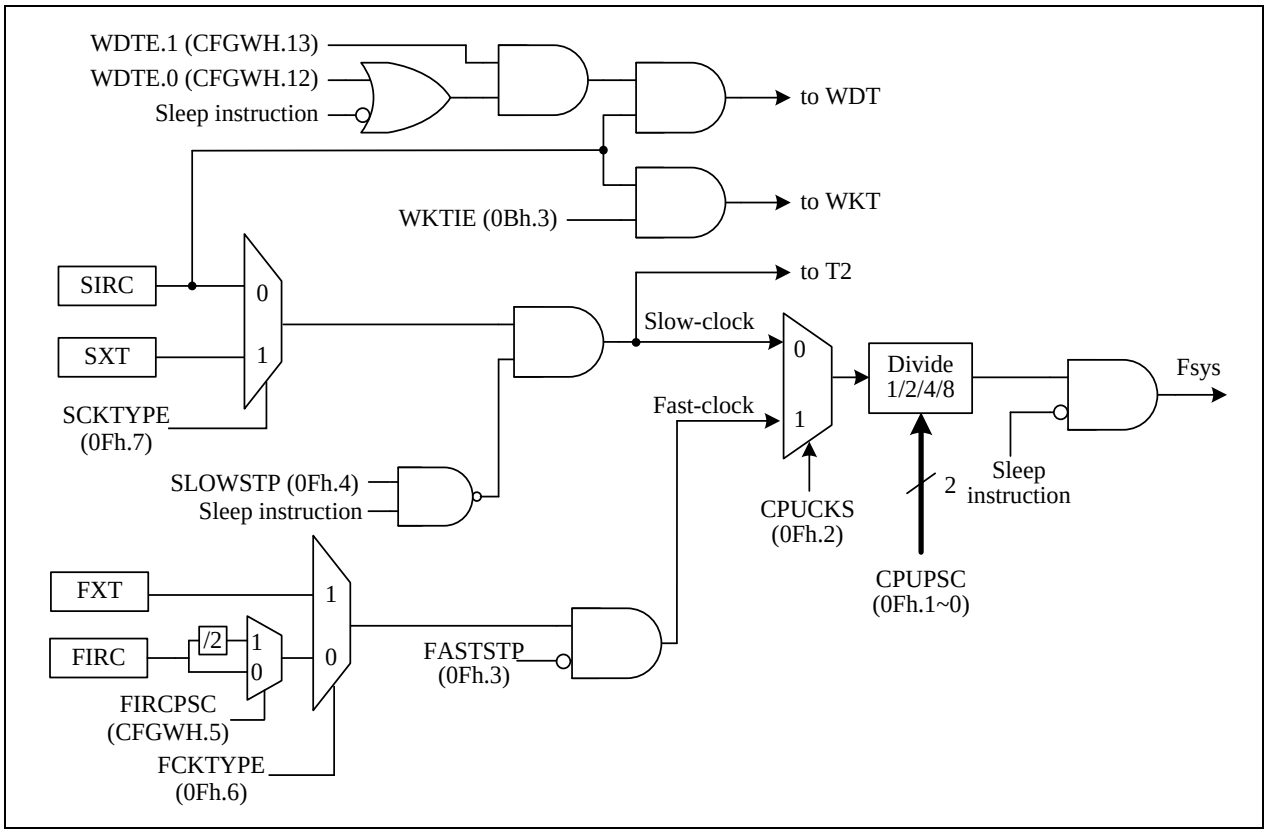

Clock Scheme Block Diagram

The frequency of FIRC can be adjusted by IRCF (10Fh). When IRCF=00h, frequency is the lowest. When IRCF=7Fh, frequency is the highest. With this function, we can adjust the frequency of FIRC after power on. Each IC may have different default value of IRCF, to make sure the frequency of FIRC=16 MHz after Power on Reset.

FAST Mode:

In this mode, the program is executed using FIRC or FXT as CPU clock (Fsys). The Timer0, Timer1 blocks are also driven by Fast-clock. The PWM0 block can be driven by Fsys, FIRC/256, FIRC (16 MHz), or FIRC*2 (32 MHz) by setting PWMCKS (91h.5~4). T2 can be driven by Slow-clock, Fsys/128, or FIRC/512 (16 MHz/512) by setting T2CKS (15h.3~2).

SLOW Mode:

After power-on or reset, device enters SLOW mode, the default Slow-clock is SIRC. In this mode, the Fast-clock can stopped (by FASTSTP=1, for power saving) or running (by FASTSTP=0), and Slow-clock is enabled. All peripheral blocks (Timer0, Timer1, etc…) clock source are Slow-clock in the SLOW mode, except PWM and T2 blocks, which can select other clock source. There are two kinds of SLOW clock can be selected, SIRC and SXT.

IDLE Mode:

After executing the SLEEP instruction, if SIRC or SXT is still oscillating, it means entering IDLE mode. IDLE mode is terminated by Reset or enabled Interrupts wake-up. There are two ways to keep SIRC or SXT oscillating in IDLE mode.

(1) Set SLOWSTP=0, before executing the SLEEP instruction, the SIRC or SXT can still oscillate. In this situation, Slow-clock can continue to oscillate to provide T2 block running in IDLE mode.

(2) Set WKTIE=1 or WDTE=11, before executing the SLEEP instruction, the SIRC can still oscillate to keep WKT/WDT operating in IDLE mode.

STOP Mode:

When SLOWSTP (0Fh.4) is set, WKTIE (0Bh.3) is cleared and WDTE=0x or 10, all blocks will be turned off and the Chip will enter the “STOP Mode” after executing the SLEEP instruction. STOP mode is similar to IDLE mode. The difference is all clock oscillators either Fast-clock or Slow-clock are stopped and no clocks are generated.

3.2 Dual System Clock Modes Transition

The device is operated in one of four modes: FAST mode, SLOW mode, IDLE mode, and STOP mode.

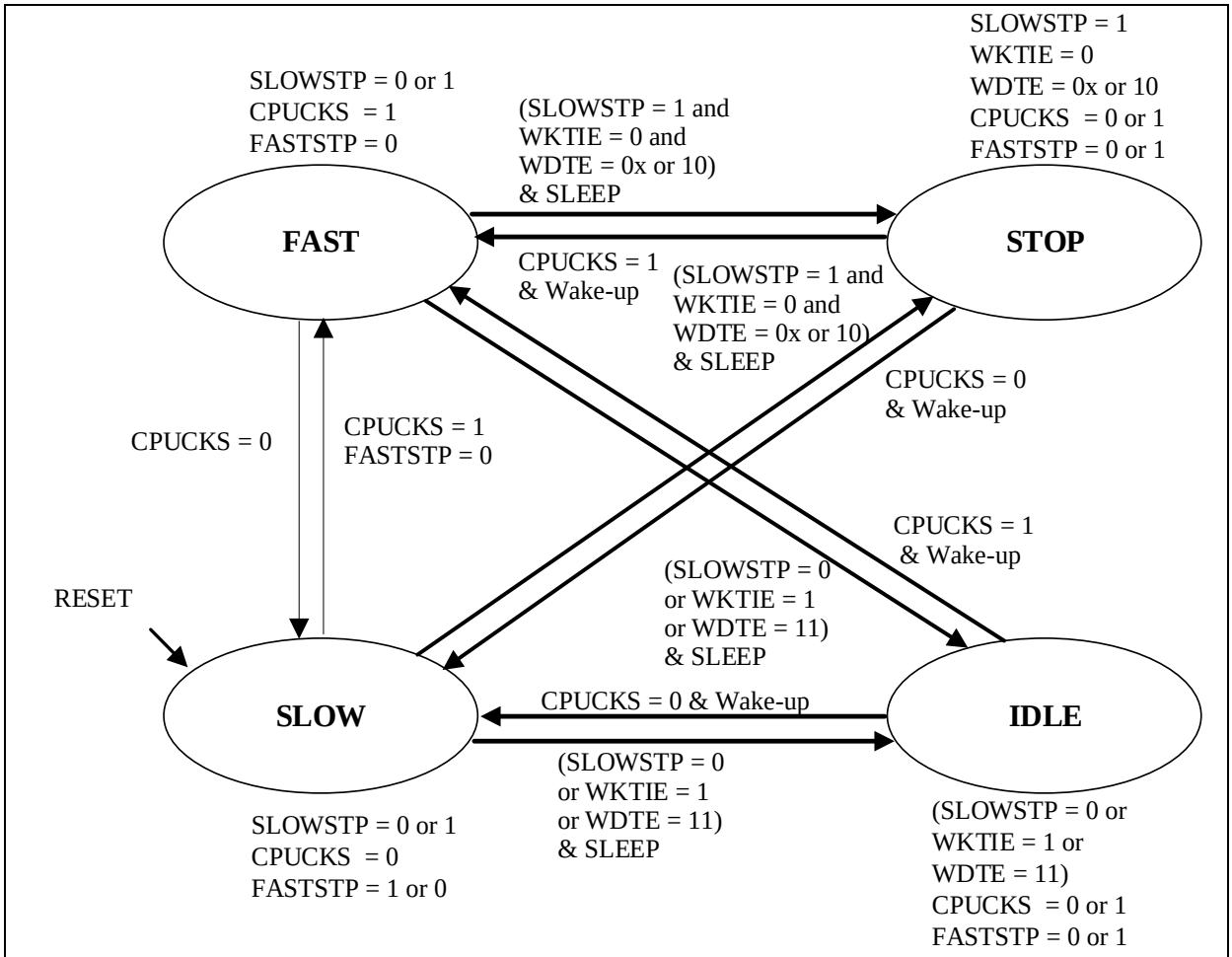

Note:

- SLEEP denotes SLEEP instruction
- Wake-up denotes wake-up events, such as External pin interrupt, WKT interrupt or T2 Interrupt.
- CPUCKS (0Fh.2), FASTSTP (0Fh.3), SLOWSTP (0Fh.4), WKTIE (0Bh.3)

CPU Operation Block Diagram

CPU Mode & Clock Functions Table:

Mode	Fsys	Fast-clock	Slow-clock	TM0/TM1	T2	WKT	WDT	Wake-up event
FAST	Fast-clock	Run	Run	Run	Run	Run	Run	X
SLOW	Slow-clock	Set by FASTSTP	Run	Run	Run	Run	Run	X
IDLE	Stop	Stop	Run	Stop	Set by T2CKS	Set by WKTIE	Set by WDTE	WKT/IO/T2
STOP	Stop	Stop	Stop	Stop	Stop	Stop	Stop	IO

- **FAST mode switches to SLOW mode**

The following steps are suggested to be executed by order when FAST mode switches to SLOW mode:

(1) Switch to Slow-clock (CPUCKS=0)

(2) Stop Fast-clock (FASTSTP=1)

◇ Example: Switch FAST mode to SLOW mode.

```
BCX     CPUCKS      ; Fsys=Slow-clock
BSX     FASTSTP     ; Disable Fast-clock
```

- **SLOW mode switches to FAST mode**

SLOW mode can be enabled by CPUCKS=0 in CLKCTL register. The following steps are suggested to be executed by order when SLOW mode switches to FAST mode:

(1) Enable Fast-clock (FASTSTP=0)

(2) Switch to Fast-clock (CPUCKS=1)

◇ Example: Switch SLOW mode to FAST mode (The Fast-clock stop).

```
BCX     FASTSTP     ; Enable Fast-clock
NOP
BSX     CPUCKS      ; Fsys=Fast-clock
```

- **IDLE mode Setting**

The IDLE mode can be configured by following setting in order:

(1) Enable Slow-clock (SLOWSTP=0) or WKT (WKTIE=1) or WDT (WDTE=11b)

(2) Switch T2 clock source to Slow-clock (T2CKS=0)

(3) Execute SLEEP instruction

IDLE mode can be waked up by External interrupt, WKT interrupt and T2 interrupt.

◇ Example: Switch FAST/SLOW mode to IDLE mode.

```
BCX     SLOWSTP     ; Enable Slow-clock after execute SLEEP instruction
MOVLW   0000**00**00b
MOVWX   T2CTL
SLEEP               ; Enter IDLE mode
```

- **STOP Mode Setting**

The STOP mode can be configured by following setting in order:

(1) Stop Slow-clock (SLOWSTP=1)

(2) Stop WKT (WKTIE=0)

(3) Execute SLEEP instruction

STOP mode can be woken up only by external pin interrupt and pin-change.
Note: CPU will not enter STOP mode if WDTE=11b

◇ Example: Switch FAST/SLOW mode to STOP mode.

```
BSX     SLOWSTP     ; Disable Slow-clock after execute SLEEP instruction
MOVLW   00000000b   ; Disable WKT counting
MOVWX   INTIE
SLEEP               ; Enter STOP mode.
```

0Bh	Bit 7	Bit 6	Bit 5	Bit 4	Bit 3	Bit 2	Bit 1	Bit 0
INTIE	ADCIE	T2IE	TM1IE	TM0IE	WKTIE	INT2IE	INT1IE	INT0IE
R/W	R/W	R/W	R/W	R/W	R/W	R/W	R/W	R/W
Reset	0	0	0	0	0	0	0	0

0Bh.3 **WKTIE:** Wake-up Timer interrupt enable and Wake-up Timer enable
0: disable
1: enable

0Fh	Bit 7	Bit 6	Bit 5	Bit 4	Bit 3	Bit 2	Bit 1	Bit 0
CLKCTL	SCKTYPE	FCKTYPE	–	SLOWSTP	FASTSTP	CPUCKS	CPUPSC	
R/W	R/W	R/W	–	R/W	R/W	R/W	R/W	
Reset	0	0	–	0	1	0	1	1

0Fh.7 **SCKTYPE**: Slow-clock select. This bit could only be changed in Fast mode(CPUCKS=1)
0: Slow-clock is SIRC
1: Slow-clock is SXT. PA4 and PA5 are crystal pins.

0Fh.6 **FCKTYPE**: Fast-clock select. This bit could only be changed in Slow mode(CPUCKS=0)
0: Fast-clock is FIRC
1: Fast-clock is FXT. PA4 and PA5 are crystal pins. FXT oscillator gain is higher than that of SXT.

0Fh.4 **SLOWSTP**: Stop Slow-clock after execute SLEEP instruction
0: Slow-clock keeps running after execute SLEEP instruction
1: Slow-clock stops running after execute SLEEP instruction

0Fh.3 **FASTSTP**: Fast-clock stop
0: Fast-clock is running
1: Fast-clock stops running

0Fh.2 **CPUCKS**: System clock source select
0: Slow-clock
1: Fast-clock

0Fh.1~0 **CPUPSC**: System clock source prescaler. System clock source
00: divided by 8
01: divided by 4
10: divided by 2
11: divided by 1

3.3 System Clock Oscillator

In the Fast Internal RC (FIRC) mode, the on-chip oscillator generates 16 MHz system clock. In Slow/Fast Crystal (SXT/FXT) mode, a crystal or ceramic resonator is connected to XI and XO pins to establish oscillation. Since power noise degrades the performance of Internal Clock Oscillator, placing power supply bypass capacitors 1 uF and 0.1 uF very close to VCC/VSS pins improves the stability of clock and the overall system.

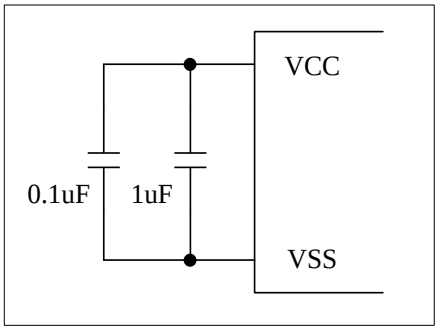

Internal RC Mode

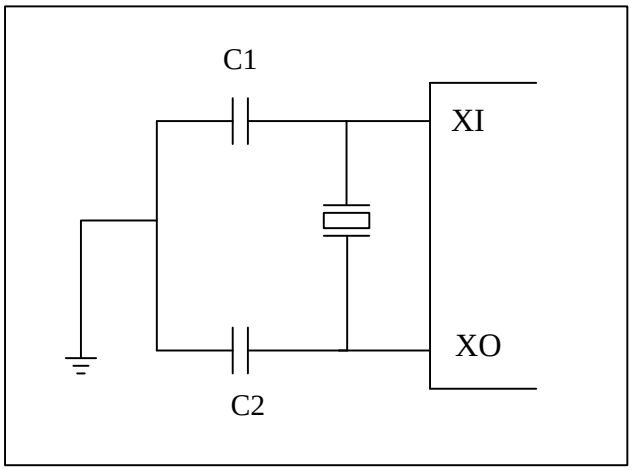

External Crystal/Ceramic Oscillator

4 Interrupt

The Chip has 1 level, 1 vector and 11 interrupt sources. Each interrupt source has its own enable control bit. An interrupt event will set its individual pending flag, no matter its enable control bit is 0 or 1.

If the corresponding interrupt enable bit (INTIE[7:0], INTIE1[6:4], INTIE1[1:0]) has been set, it would trigger CPU to service the interrupt. CPU accepts interrupt at the end of current executed instruction cycle. In the meanwhile, a “LCALL 004” instruction is inserted to CPU, and i-flag is set to prevent recursive interrupt nesting.

The i-flag is cleared in the instruction after the “RETI” instruction. That is, at least one instruction in main program is executed before service the pending interrupt. The interrupt event is level triggered. F/W must clear the interrupt event register while serving the interrupt routine.

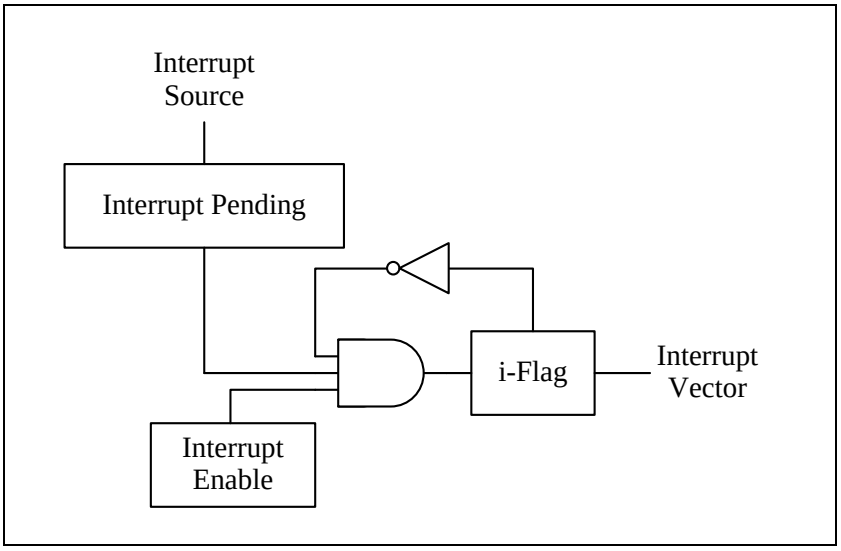

◇ Example: Setup INT1 (PA1) interrupt request with rising edge trigger

```
            ORG     000h            ; Reset Vector
            LGOTO   START           ; Goto user program address

            ORG     004h            ; All interrupt vector
            LGOTO   INT             ; If INT1 (PA1) input occurred rising edge

            ORG     005h
START:
            MOVLW   0000xxxxb
            MOVWX   PAMOD10         ; Select INT1 Pin Mode as mode 0000b
                                    ; Open drain output low or input with Pull-up
            MOVLW   xxxxxx1xb
            MOVWX   PAD             ; Release INT1, it becomes Schmitt-trigger
                                    ; input with input pull-up resistor
            MOVLW   xx1xxxxxb
            MOVWX   OPTION          ; Set INT1 interrupt trigger as rising edge
            MOVLW   111111 01b
            MOVWX   INTIF           ; Clear INT1 interrupt request flag
            MOVLW   00000010b
            MOVWX   INTIE           ; Enable INT1 interrupt
MAIN:
            …
            LGOTO   MAIN

INT:
            MOVWX   20h             ; Store W data to SRAM 20h
            MOVXW   STATUS          ; Get STATUS data
            MOVWX   21h             ; Store STATUS data to SRAM 21h

            BTXSC   INT1IF          ; Check INT1IF bit
            LCALL   INT1_SUB        ; INT1IF = 1, jump to INT1 interrupt service routine
            …                       ;
EXIT_INT:
            MOVXW   21h             ; Get SRAM 21h data
            MOVWX   STATUS          ; Restore STATUS data
            MOVXW   20h             ; Restore W data
            RETI                    ; Return from interrupt

INT1_SUB:                           ; INT1 interrupt service routine
            …
            MOVLW   111111 01b
            MOVWX   INTIF           ; Clear INT1 interrupt request flag
            RET
```

0Bh	Bit 7	Bit 6	Bit 5	Bit 4	Bit 3	Bit 2	Bit 1	Bit 0
INTIE	ADCIE	T2IE	TM1IE	TM0IE	WKTIE	INT2IE	INT1IE	INT0IE
R/W	R/W	R/W	R/W	R/W	R/W	R/W	R/W	R/W
Reset	0	0	0	0	0	0	0	0

0Bh.7 **ADCIE:** ADC interrupt enable
0: disable
1: enable

0Bh.6 **T2IE:** T2 interrupt enable
0: disable
1: enable

0Bh.5 **TM1IE:** Timer1 interrupt enable
0: disable
1: enable

0Bh.4 **TM0IE:** Timer0 interrupt enable
0: disable
1: enable

0Bh.3 **WKTIE:** Wake-up Timer interrupt enable and Wake-up Timer enable
0: disable
1: enable

0Bh.2 **INT2IE:** INT2 interrupt enable
0: disable
1: enable

0Bh.1 **INT1IE:** INT1 interrupt enable
0: disable
1: enable

0Bh.0 **INT0IE:** INT0 interrupt enable
0: disable
1: enable

0Ch	Bit 7	Bit 6	Bit 5	Bit 4	Bit 3	Bit 2	Bit 1	Bit 0
INTIF	ADCIF	T2IF	TM1IF	TM0IF	WKTIF	INT2IF	INT1IF	INT0IF
R/W	R/W	R/W	R/W	R/W	R/W	R/W	R/W	R/W
Reset	0	0	0	0	0	0	0	0

0Ch.7 **ADCIF:** ADC interrupt event pending flag
This bit is set by H/W after ADC end of conversion, write 7Fh to INTIF will clear this flag

0Ch.6 **T2IF:** T2 interrupt event pending flag
This bit is set by H/W while T2 overflows, write BFh to INTIF will clear this flag

0Ch.5 **TM1IF:** Timer1 interrupt event pending flag
This bit is set by H/W while Timer1 overflows, write DFh to INTIF will clear this flag

0Ch.4 **TM0IF:** Timer0 interrupt event pending flag
This bit is set by H/W while Timer0 overflows, write EFh to INTIF will clear this flag

0Ch.3 **WKTIF:** Wake-up Timer interrupt event pending flag
This bit is set by H/W while Wake-up Timer is timeout, write F7h to INTIF will clear this flag

0Ch.2 **INT2IF:** INT2 pin falling interrupt pending flag
This bit is set by H/W at INT2 pin's falling edge, write FBh to INTIF will clear this flag

0Ch.1 **INT1IF:** INT1 pin falling/rising interrupt pending flag
This bit is set by H/W at INT1 pin's falling/rising edge, write FDh to INTIF will clear this flag

0Ch.0 **INT0IF:** INT0 pin falling/rising interrupt pending flag
This bit is set by H/W at INT0 pin's falling/rising edge, write FEh to INTIF will clear this flag

0Dh	Bit 7	Bit 6	Bit 5	Bit 4	Bit 3	Bit 2	Bit 1	Bit 0
INTIE1	–	PCIE	EEPIE	CMPIE	–	–	PWMIE	LVDIE
R/W	–	R/W	R/W	R/W	–	–	R/W	R/W
Reset	–	0	0	0	–	–	0	0

0Dh.6 **PCIE:** All port pin-change wake-up interrupt enable
0: disable
1: enable

0Dh.5 **EEPIE:** EEPROM interrupt enable
0: disable
1: enable

0Dh.4 **CMPIE:** Comparator interrupt enable
0: disable
1: enable

0Dh.1 **PWMIE:** PWM interrupt enable
0: disable
1: enable

0Dh.0 **LVDIE:** LVD interrupt enable
0: disable
1: enable

0Eh	Bit 7	Bit 6	Bit 5	Bit 4	Bit 3	Bit 2	Bit 1	Bit 0
INTIF1	–	PCIF	EEPIF	CMPIF	–	–	PWMIF	LVDIF
R/W	–	R/W	R/W	R/W	–	–	R/W	R/W
Reset	–	0	0	0	–	–	0	0

0Eh.6 **PCIF:** All port pin-change wake-up interrupt event pending flag
This bit is set by H/W at all pin's falling/rising edge, write BFh to INTIF1 will clear this flag. A sleep instruction is necessary before the event of pin-change otherwise pin-change event may be missed.

0Eh.5 **EEPIF:** EEPROM interrupt event pending flag
This bit is set by H/W when EEPROM writing is finishing or time-out event occurred. Writing DFh to INTIF1 will clear this flag.

0Eh.4 **CMPIF:** Comparator interrupt event pending flag
This bit is set by H/W while CMPO match trigger condition, write EFh to INTIF1 will clear this flag

0Eh.1 **PWMIF:** PWM interrupt event pending flag
This bit is set by H/W after PWM period counter roll over, write FDh to INTIF1 will clear this flag

0Eh.0 **LVDIF:** LVD interrupt event pending flag
This bit is set by H/W after $V_{CC} < V_{LVD}$, write FEh to INTIF1 will clear this flag

81h	Bit 7	Bit 6	Bit 5	Bit 4	Bit 3	Bit 2	Bit 1	Bit 0
OPTION	HWAUTO	INT0EDG	INT1EDG	–	WDTPSC		WKTPSC	
R/W	R/W	R/W	R/W	–	R/W		R/W	
Reset	0	0	0	–	1	1	1	1

81h.6 **INT0EDG:** INT0 pin interrupt edge selection
0: falling edge to trigger
1: rising edge to trigger

81h.5 **INT1EDG:** INT0 pin interrupt edge selection
0: falling edge to trigger
1: rising edge to trigger

91h	Bit 7	Bit 6	Bit 5	Bit 4	Bit 3	Bit 2	Bit 1	Bit 0
OPTION2	–	–	PWMCKS		–	INT2SEL	INT1SEL	INT0SEL
R/W	–	–	R/W		–	R/W	R/W	R/W
Reset	–	–	0	0	–	0	0	0

91h.2 **INT2SEL:** INT2 pin select
0: PA7
1: PB5

91h.1 **INT1SEL:** INT1 pin select
0: PA1
1: PB1

91h.0 **INT0SEL:** INT0 pin select
0: PA3
1: PB2

16h	Bit 7	Bit 6	Bit 5	Bit 4	Bit 3	Bit 2	Bit 1	Bit 0
LVCTL	LVDF	LVDHYS	LVRSAV	LVDSAV	LVDS			
R/W	R	R/W	R/W	R/W	R/W			
Reset	0	0	1	1	0	0	0	0

16h.7 **LVDF**: Low voltage detection flag
0: $V_{CC} > V_{LVD}$
1: $V_{CC} < V_{LVD}$

16h.6 **LVDHYS**: LVD Hysteresis
0: disable
1: enable

16h.4 **LVDSAV**: LVD auto power off in STOP/IDLE mode
0: disable LVD auto power off in STOP/IDLE mode
1: enable LVD auto power off in STOP/IDLE mode

16h.3~0 **LVDS**: LVD voltage (V_{LVD}) select
Please refer to the table of LVD voltage in the section of "LVD Circuit Characteristics". (Left click the link to go to that page)

5 I/O Port

5.1 PA0-PA7, PB0-PB7, PD0-PD1

Each IO has 4 bits as the mode setting. The mode setting can include the following functions: open drain output, CMOS output, pull-up resistor, pull-down resistor, pin-change wake-up, PWMO, TCOUT, TM1OUT and so on. All IO support two sink current options, which are defined by the HSINK (105h.2). **PA7 has no high-sink, 1/2 bias and resistor pull-down capability.**

These pins can be operated in different modes as below table.

PAxMOD PBxMOD PDxMOD	PADx PBDx PDDx	PA0~PA7, PB0~PB7, PD0~PD1 pin function	Pin State	Resistor Pull-up	Digital Input	Pin-changed Wake-up
0000b	0	Open Drain	Drive Low	-	-	-
	1	Input	Pull-up	Y	Y	-
0001b	0	Open Drain	Drive Low	-	-	-
	1	Input	Hi-Z	-	Y	-
0010b	0	CMOS Output (except PWMx)	Drive Low	-	-	-
	1		Drive High	-	-	-
0011b	X	Analog input/output for ADCx / CINx / CIPx / XT*	Hi-Z	-	-	-

*: XT mean crystal oscillator

I/O Pin Function Table 1

PAxMOD PBxMOD PDxMOD	PADx PBDx PDDx	PA0~PA7*, PB0~PB7, PD0~PD1 pin function	Pin State	Resistor Pull-down	Digital Input	Pin-changed Wake-up
0100b	0	Open Drain	Drive Low	-	-	-
	1	Input	Pull-down*	Y*	Y	-
0101b	0	Open Drain	Drive Low	-	-	-
	1	Input	Hi-Z	-	Y	-
0110b	0	CMOS Output (except PWMx)	Drive Low	-	-	-
	1		Drive High	-	-	-
0111b	X	Function CMOS output for PWMx / TCOUT / TM1OUT	-	-	-	-

*: PA7 has no high-sink, 1/2 bias and resistor pull-down capability.

I/O Pin Function Table 2

PAxMOD PBxMOD PDxMOD	PADx PBDx PDDx	PA0~PA7, PB0~PB7, PD0~PD1 pin function	Pin State	Resistor Pull-up	Digital Input	Pin-changed Wake-up
1000b	0	Open Drain	Drive Low	-	-	-
	1	Input	Pull-up	Y	Y	Y
1001b	0	Open Drain	Drive Low	-	-	-
	1	Input	Hi-Z	-	Y	Y
1010b	0	CMOS Output (except PWMx)	Drive Low	-	-	-
	1		Drive High	-	-	-
1011b		Reserved				

I/O Pin Function Table 3

PAxMOD PBxMOD PDxMOD	PADx PBDx PDDx	PA0~PA7*, PB0~PB7, PD0~PD1 pin function	Pin State	Resistor Pull-down	Digital Input	Pin- changed Wake-up
1100b	0	Open Drain	Drive Low	-	-	-
	1	Input	Pull-down*	Y*	Y	Y
1101b	0	Open Drain	Drive Low	-	-	-
	1	Input	Hi-Z	-	Y	Y
1110b	0	CMOS Output (except PWMx)	Drive Low	-	-	-
	1		Drive High	-	-	-
1111b	X	Analog output for 1/2 V_{CC} (LCD 1/2 bias) Does not contain PA7	1/2 V_{CC}	-	-	-
		- (PA7)	Pull-up			

*: PA7 has no high-sink, 1/2 bias and resistor pull-down capability.

I/O Pin Function Table 4

Pin Name	PAxMOD / PBxMOD / PDxMOD Setting		
	0011b (Analog in/out)	0111b (Digital output)	1111b (Analog output)
PA0	ADC0 CIN2	PWM5O	COM0 (LCD1/2 bias)
PA1	ADC1 CIP1	PWM1O	COM1 (LCD1/2 bias)
PA2	ADC2 CIP2	PWM4O	COM2 (LCD1/2 bias)
PA3	ADC3 CIN1	PWM2O	COM3 (LCD1/2 bias)
PA4	ADC4 XIN	PWM0P	COM4 (LCD1/2 bias)
PA5	ADC5 XOUT	PWM3O	COM5 (LCD1/2 bias)
PA6	ADC6	PWM0N	COM6 (LCD1/2 bias)
PA7			Pull-up
PB0	ADC7	PWM1O	COM7 (LCD1/2 bias)
PB1	ADC8	PWM2O	COM8 (LCD1/2 bias)
PB2	ADC9	PWM3O	COM9 (LCD1/2 bias)
PB3		PWM4O	COM10 (LCD1/2 bias)
PB4	ADC10 CIN4	PWM0P	COM11 (LCD1/2 bias)
PB5	ADC11	PWM5O	COM12 (LCD1/2 bias)
PB6	ADC12 CIP3	PWM0N	COM13 (LCD1/2 bias)
PB7	ADC13 CIN3	TM1OUT	COM14 (LCD1/2 bias)
PD0			COM15 (LCD1/2 bias)
PD1	CIP4	TCOUT	COM16 (LCD1/2 bias)

Special function for PAxMOD/PBxMOD/PDxMOD Table

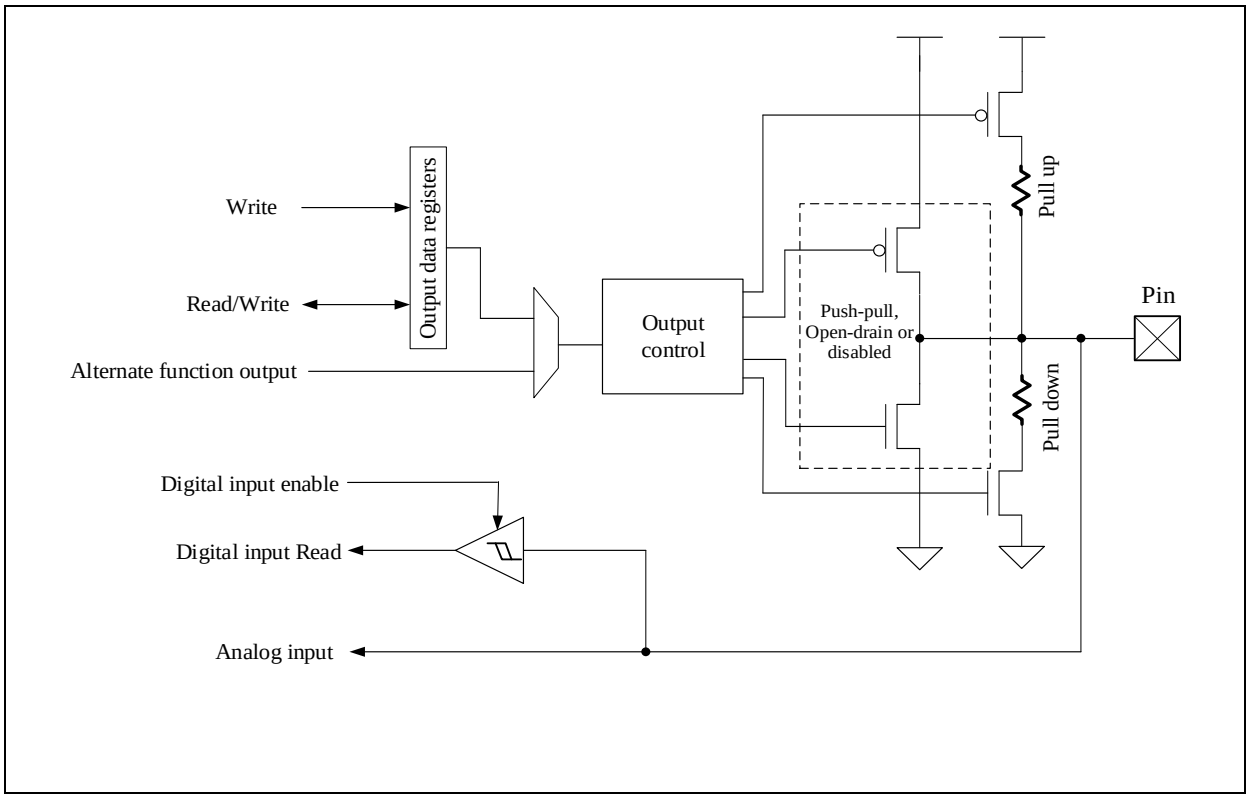

General Pin Structure

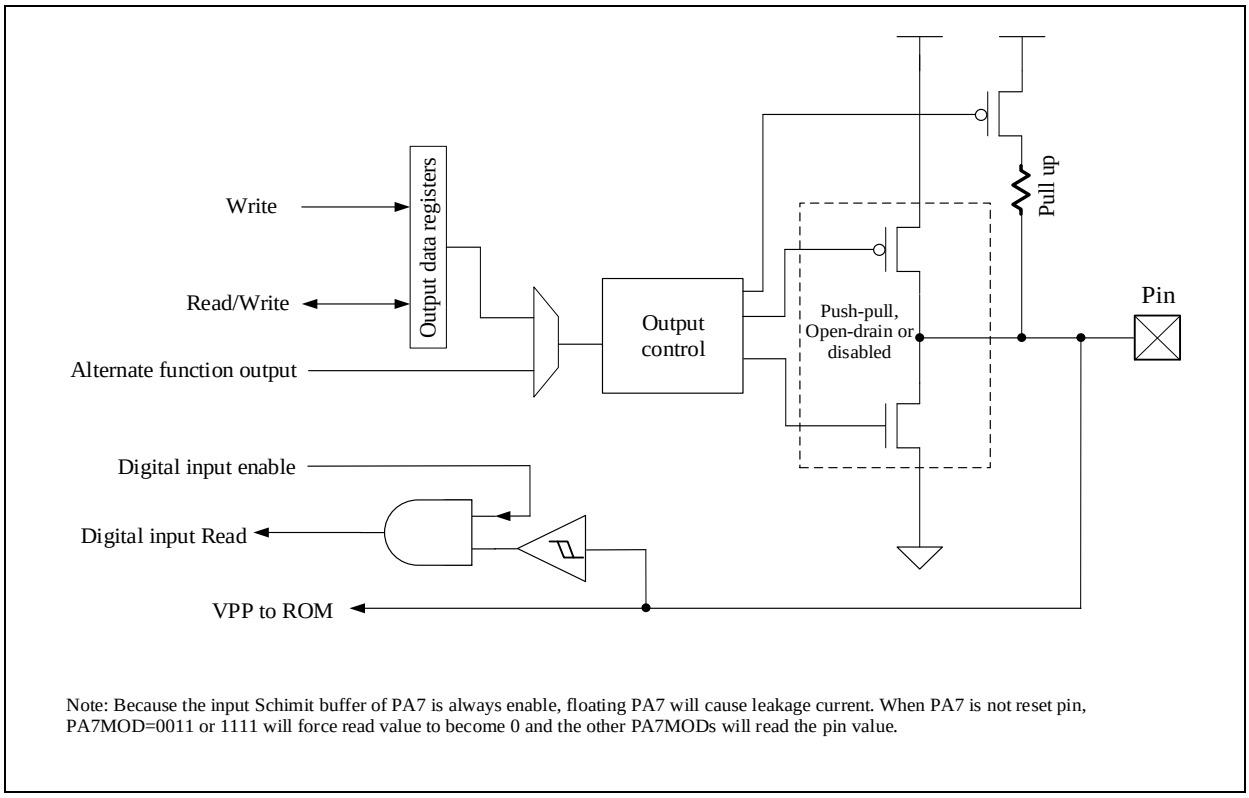

Note: Because the input Schimit buffer of PA7 is always enable, floating PA7 will cause leakage current. When PA7 is not reset pin, PA7MOD=0011 or 1111 will force read value to become 0 and the other PA7MODs will read the pin value.

PA7 Structure

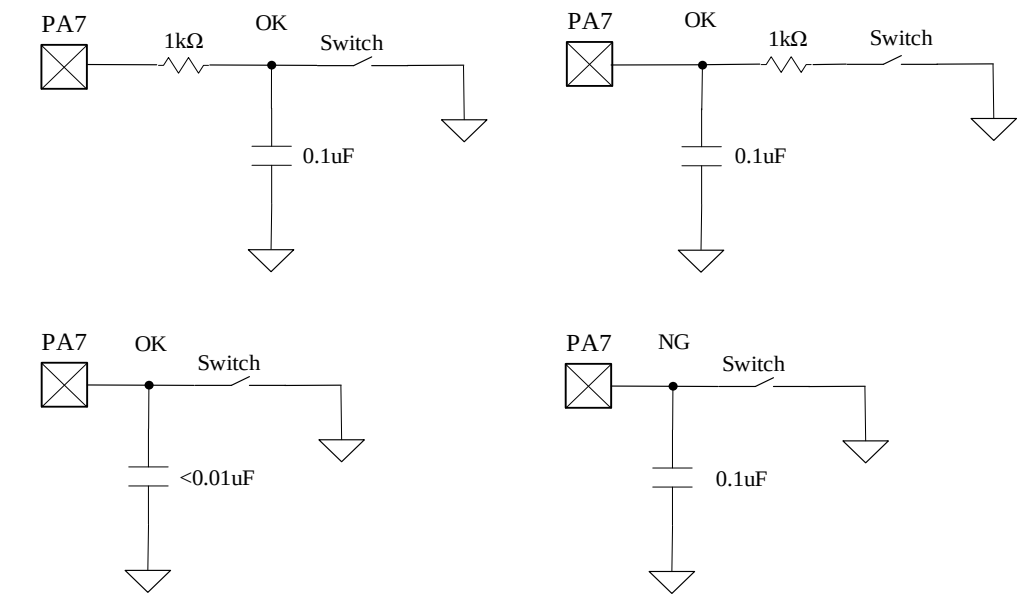

Note: Because PA7 is also the VPP for ROM programming, too dirty PA7 will cause malfunction.

Constraint on PA7

85h	Bit 7	Bit 6	Bit 5	Bit 4	Bit 3	Bit 2	Bit 1	Bit 0
PAMOD10	PA1MOD				PA0MOD			
R/W	R/W				R/W			
Reset	0	0	0	1	0	0	0	1

86h	Bit 7	Bit 6	Bit 5	Bit 4	Bit 3	Bit 2	Bit 1	Bit 0
PAMOD32	PA3MOD				PA2MOD			
R/W	R/W				R/W			
Reset	0	0	0	1	0	0	0	1

87h	Bit 7	Bit 6	Bit 5	Bit 4	Bit 3	Bit 2	Bit 1	Bit 0
PAMOD54	PA5MOD				PA4MOD			
R/W	R/W				R/W			
Reset	0	0	0	1	0	0	0	1

88h	Bit 7	Bit 6	Bit 5	Bit 4	Bit 3	Bit 2	Bit 1	Bit 0
PAMOD76	PA7MOD				PA6MOD			
R/W	R/W				R/W			
Reset	0	0	0	0	0	0	0	1

88h.7~4 **PA7MOD ~ PA0MOD**: PA7~PA0 Pin Mode Control
88h.3~0 0000: Open drain or digital input with pull-up
87h.7~4 0001: Open drain or digital input
87h.3~0 0010: CMOS Push-pull
86h.7~4 0011: Analog input/output
86h.3~0 0100: Open drain or digital input with pull-down(PA7 has no pull-down)
85h.7~4 0101: Open drain or digital input
85h.3~0 0110: CMOS Push-pull
0111: Alternate function output
1000: Open drain or digital input with pull-up and pin-changed wake-up

1001: Open drain or digital input and pin-changed wake-up
1010: CMOS Push-pull
1011: Reserved
1100: Open drain or digital input with pull-down and pin-changed wake-up(PA7 has no pull-down)
1101: Open drain or digital input and pin-changed wake-up
1110: CMOS Push-pull
1111: 1/2 V_{CC} (LCD 1/2 bias) (except PA7) or pull-up(PA7)

8Ch	Bit 7	Bit 6	Bit 5	Bit 4	Bit 3	Bit 2	Bit 1	Bit 0
PBMOD10	PB1MOD				PB0MOD			
R/W	R/W				R/W			
Reset	0	0	0	1	0	0	0	1

8Dh	Bit 7	Bit 6	Bit 5	Bit 4	Bit 3	Bit 2	Bit 1	Bit 0
PBMOD32	PB3MOD				PB2MOD			
R/W	R/W				R/W			
Reset	0	0	0	1	0	0	0	1

8Eh	Bit 7	Bit 6	Bit 5	Bit 4	Bit 3	Bit 2	Bit 1	Bit 0
PBMOD54	PB5MOD				PB4MOD			
R/W	R/W				R/W			
Reset	0	0	0	1	0	0	0	1

8Fh	Bit 7	Bit 6	Bit 5	Bit 4	Bit 3	Bit 2	Bit 1	Bit 0
PBMOD76	PB7MOD				PB6MOD			
R/W	R/W				R/W			
Reset	0	0	0	1	0	0	0	1

8Fh.7~4 **PB7MOD ~ PB0MOD**: PB7~PB0 Pin Mode Control
8Fh.3~0 0000: Open drain or digital input with pull-up
8Eh.7~4 0001: Open drain or digital input
8Eh.3~0 0010: CMOS Push-pull
8Dh.7~4 0011: Analog input
8Dh.3~0 0100: Open drain or digital input with pull-down
8Ch.7~4 0101: Open drain or digital input
8Ch.3~0 0110: CMOS Push-pull
0111: Alternate function output
1000: Open drain or digital input with pull-up and pin-changed wake-up
1001: Open drain or digital input and pin-changed wake-up
1010: CMOS Push-pull
1011: Reserved
1100: Open drain or digital input with pull-down and pin-changed wake-up
1101: Open drain or digital input and pin-changed wake-up
1110: CMOS Push-pull
1111: 1/2 V_{CC} (LCD 1/2 bias)

90h	Bit 7	Bit 6	Bit 5	Bit 4	Bit 3	Bit 2	Bit 1	Bit 0
PDMOD10	PD1MOD				PD0MOD			
R/W	R/W				R/W			
Reset	0	0	0	1	0	0	0	1

90h.7~4 **PD1MOD ~ PD0MOD**: PD1~PD0 Pin Mode Control
90h.3~0 0000: Open drain or digital input with pull-up
0001: Open drain or digital input
0010: CMOS Push-pull
0011: Analog input

0100: Open drain or digital input with pull-down
0101: Open drain or digital input
0110: CMOS Push-pull
0111: Alternate function output
1000: Open drain or digital input with pull-up and pin-changed wake-up
1001: Open drain or digital input and pin-changed wake-up
1010: CMOS Push-pull
1011: Reserved
1100: Open drain or digital input with pull-down and pin-changed wake-up
1101: Open drain or digital input and pin-changed wake-up
1110: CMOS Push-pull
1111: 1/2 V_{CC} (LCD 1/2 bias)

05h	Bit 7	Bit 6	Bit 5	Bit 4	Bit 3	Bit 2	Bit 1	Bit 0
PAD	PAD							
R/W	R/W							
Reset	1	1	1	1	1	1	1	1

05h.7~0 **PAD**: PA7~PA0 data

06h	Bit 7	Bit 6	Bit 5	Bit 4	Bit 3	Bit 2	Bit 1	Bit 0
PBD	PBD							
R/W	R/W							
Reset	1	1	1	1	1	1	1	1

06h.7~0 **PBD**: PB7~PB0 data

07h	Bit 7	Bit 6	Bit 5	Bit 4	Bit 3	Bit 2	Bit 1	Bit 0
PDD	–	–	–	–	–	–	PDD	
R/W	–	–	–	–	–	–	R/W	
Reset	–	–	–	–	–	–	1	1

07h.1~0 **PDD**: PD1~PD0 data

105h	Bit 7	Bit 6	Bit 5	Bit 4	Bit 3	Bit 2	Bit 1	Bit 0
PINMOD	–	–	Reserved	Reserved	–	HSINK	Reserved	Reserved
R/W	–	–	R	R/W	–	R/W	R/W	R/W
Reset	–	–	x	0	–	1	0	0

105h.5 **Reserved**: read as unknown after reset
105h.4 **Reserved**: must be kept at 0
105h.2 **HSINK**: All IO ports high sink current enable
0: low sink current
1: high sink current
105h.1 **Reserved**: must be kept at 0
105h.0 **Reserved**: must be kept at 0

5.2 Pin-change Wake-up & Interrupt

All of the IO pins also have the pin-change wake-up and interrupt capability. A sleep instruction is necessary before the event of pin-change otherwise pin-change event may be missed.

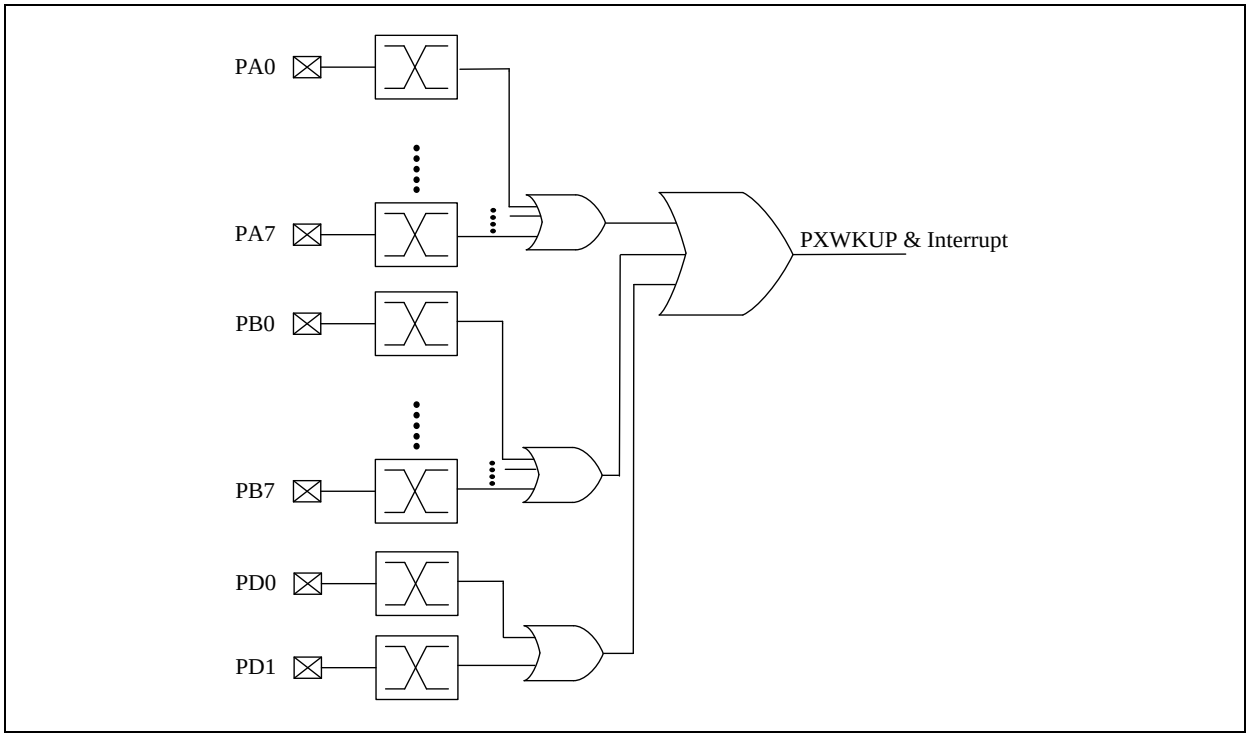

6 Peripheral Functional Block

6.1 Watchdog (WDT) /Wake-up (WKT) Timer

The WDT and WKT share the same built-in internal RC Oscillator and have individual counters. The overflow period of WDT, WKT can be selected by individual prescaler (WDTPSC[1:0], WKTPSC[1:0]). The WDT timer is cleared by the CLRWDT instruction. If the Watchdog is enabled, the WDT generates the chip reset signal.

The WKT timer is an interval timer, WKT time out will generate WKT Interrupt Flag (WKTIF). The WKT timer is cleared/stopped by WKTIE=0. Set WKTIE=1, the WKT timer will always count regardless at any CPU operating mode.

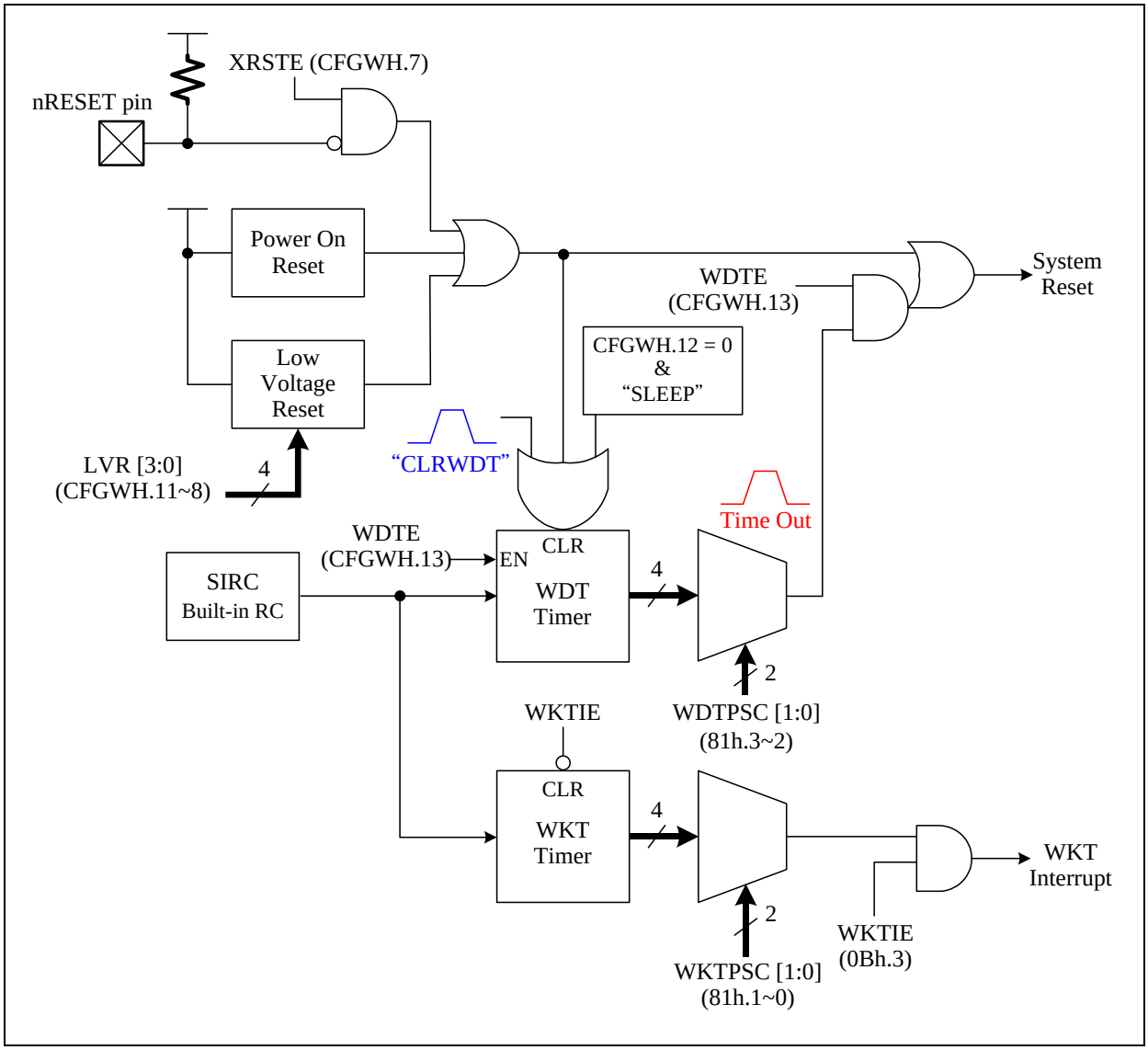

WDT/WKT Block Diagram

The WDT's behavior in different Mode is shown as below table.

Mode	CFGWH[13:12]		WDT
	WDTE[1]	WDTE[0]	
Normal Mode	0	0	Stop
	0	1	Stop
	1	0	Run
	1	1	Run
Power-down Mode (SLEEP)	0	0	Stop
	0	1	Stop
	1	0	Stop
	1	1	Run

Watchdog clear is controlled by CLRWDT instruction.

◇ Example: Clear watchdog timer by CLRWDT instruction.

```
MAIN:   …                       ; Execute program.
        CLRWDT                  ; Execute CLRWDT instruction.
        …
        LGOTO     MAIN
```

◇ Example: Setup WDT time.

```
        MOVLW     00000111b
        MOVWX     OPTION        ; Select WDT Time out=250 ms @5V
        …
```

◇ Example: Set WKT period and interrupt function.

```
        MOVLW     00000110b
        MOVWX     OPTION        ; Select WKT period=62.5 ms @5V
        MOVLW     11110111b     ; Clear WKT interrupt flag by using byte operation
        MOVWX     INTIF         ; Don't use bit operation "BCX WKTIF" to clear

        BSX       WKTIE         ; Enable WKT interrupt function
```

03h	Bit 7	Bit 6	Bit 5	Bit 4	Bit 3	Bit 2	Bit 1	Bit 0
STATUS	IRP	RP1	RP0	TO	PD	Z	DC	C
R/W	R/W	R/W	R/W	R	R	R/W	R/W	R/W
Reset	0	0	0	0	0	0	0	0

03h.4 **TO:** WDT time out flag, read-only
0: after Power On Reset or CLRWDT / SLEEP instructions
1: WDT time out occurs

0Ch	Bit 7	Bit 6	Bit 5	Bit 4	Bit 3	Bit 2	Bit 1	Bit 0
INTIF	ADCIF	T2IF	TM1IF	TM0IF	WKTIF	INT2IF	INT1IF	INT0IF
R/W	R/W	R/W	R/W	R/W	R/W	R/W	R/W	R/W
Reset	0	0	0	0	0	0	0	0

0Ch.3 **WKTIF:** Wake-up Timer interrupt event pending flag
This bit is set by H/W while Wake-up Timer is timeout, write F7h to INTIF will clear this flag

0Bh	Bit 7	Bit 6	Bit 5	Bit 4	Bit 3	Bit 2	Bit 1	Bit 0
INTIE	ADCIE	T2IE	TM1IE	TM0IE	WKTIE	INT2IE	INT1IE	INT0IE
R/W	R/W	R/W	R/W	R/W	R/W	R/W	R/W	R/W
Reset	0	0	0	0	0	0	0	0

0Bh.3 **WKTIE:** Wake-up Timer interrupt enable and Wake-up Timer enable
0: disable
1: enable

81h	Bit 7	Bit 6	Bit 5	Bit 4	Bit 3	Bit 2	Bit 1	Bit 0
OPTION	HWAUTO	INT0EDG	INT1EDG	–	WDTPSC		WKTPSC	
R/W	R/W	R/W	R/W	–	R/W		R/W	
Reset	0	0	0	–	1	1	1	1

81h.3~2 **WDTPSC:** WDT period (@V_{CC}=5V)
00: 125 ms
01: 250 ms
10: 1001 ms
11: 2001 ms

81h.1~0 **WKTPSC:** WKT period (@V_{CC}=5V)
00: 15.6 ms
01: 31.3 ms
10: 62.5 ms
11: 125 ms

6.2 Timer0

Timer0(TM0) (01h.7~0) is an 8-bit wide register. It can be read or written as any other register. Besides, Timer0 increases itself periodically and automatically rolls over a new "offset value" (TM0RLD) while it rolls over based on the pre-scaled clock source, which can be Fsys/2 or TM0CKI (PA2) rising/falling input. The Timer0 increase rate is determined by “Timer0 Pre-Scale” (TM0PSC) register. The Timer0 always generates TM0IF (0Ch.4) when its count rolls over. It generates Timer0 Interrupt if TM0IE (0Bh.4) is set. Timer0 can be stopped counting if the TM0STP (11h.6) bit is set.

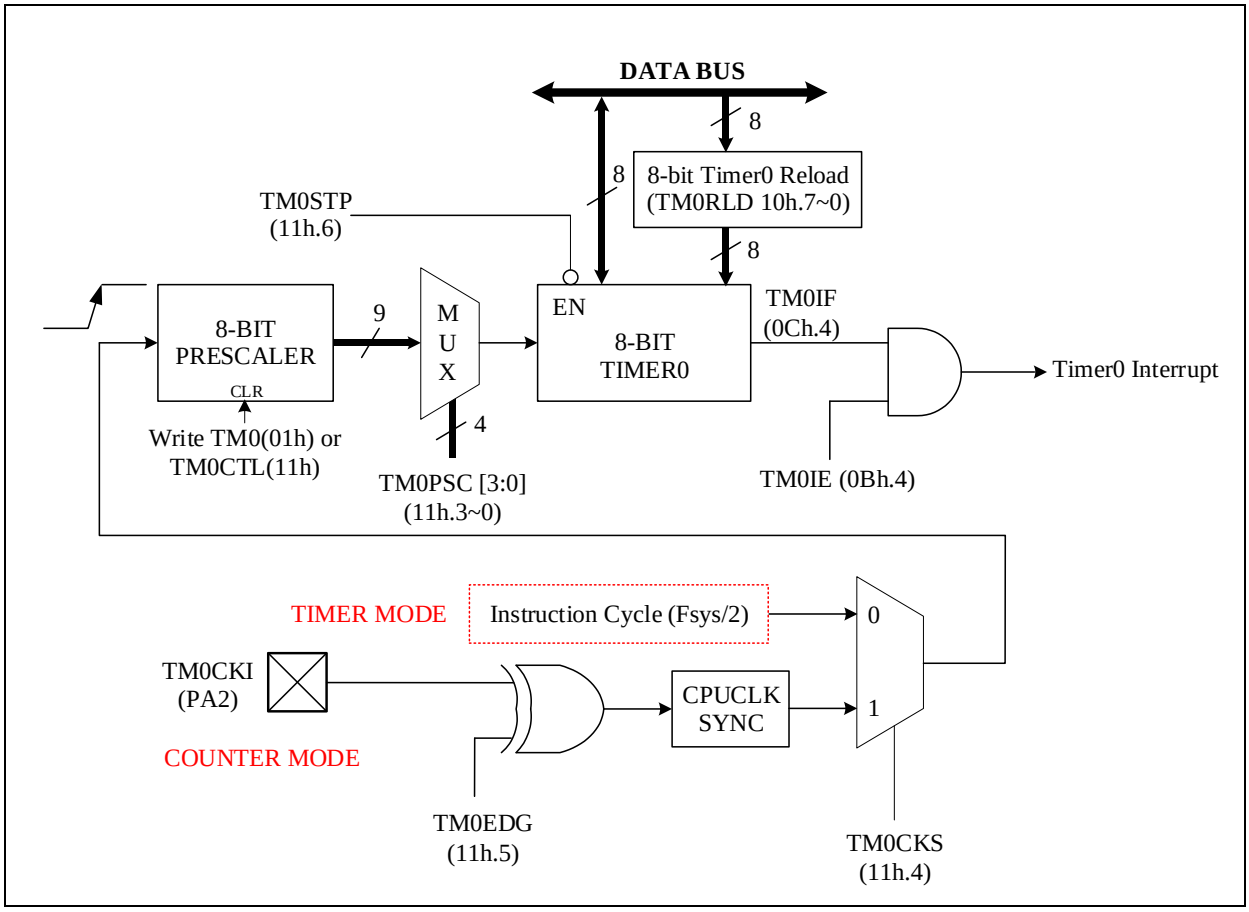

Timer0 Block Diagram

The following timing diagram describes the Timer0 works in pure Timer mode.

When the Timer0 prescaler (TM0PSC) is written, the internal 8-bit prescaler will be cleared to 0 to make the counting period correct at the first Timer0 count. TM0CLK is the internal signal that causes the Timer0 to increase by 1 at the end of TM0CLK. TM0WR is also the internal signal that indicates the Timer0 is directly written by instruction; meanwhile, the internal 8-bit prescaler will be cleared. When Timer0 counts from FFh to TM0RLD, TM0IF (Timer0 Interrupt Flag) will be set to 1, and generate interrupt if TM0IE (Timer0 Interrupt Enable) is set.

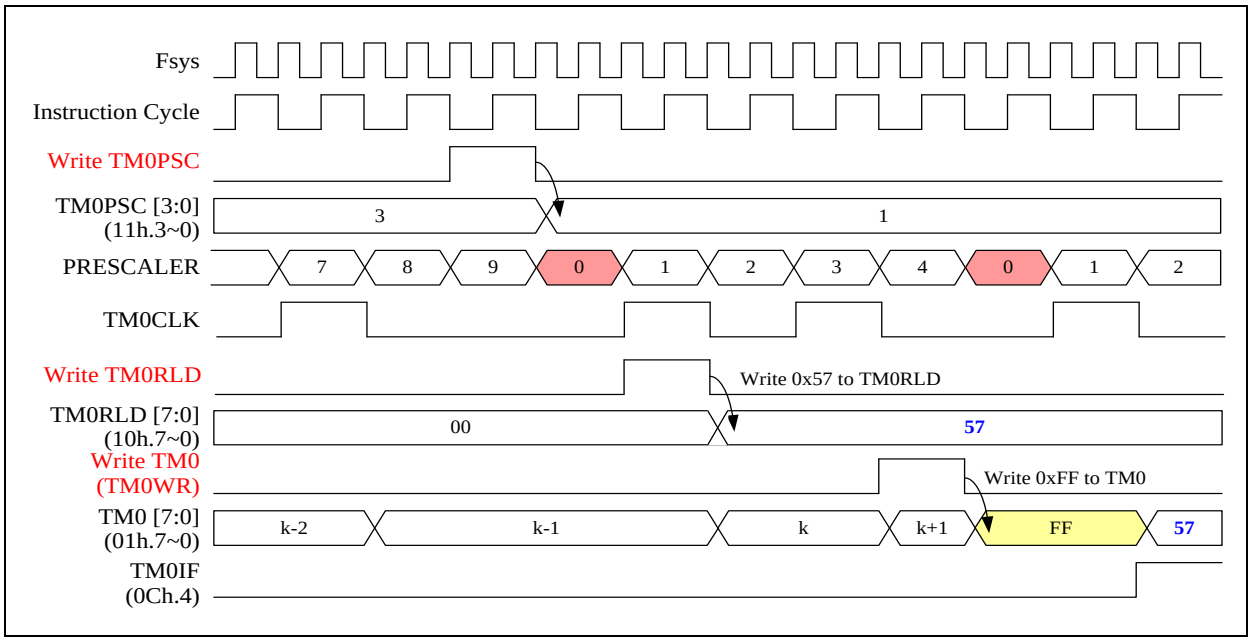

Timer0 works in Timer mode (TM0CKS=0)

The equation of Timer0 interrupt time value is as following:

Timer0 interrupt interval cycle time = Fsys / 2 / TM0PSC / (256-TM0RLD)

◇ Example: Setup Timer0 work in Timer mode, if Fsys = 8 MHz

```
; Setup Timer0 clock source and divider
        MOVLW   00x00101b       ; TM0CKS = 0, Timer0 clock is instruction cycle
        MOVWX   TM0CTL          ; TM0PSC = 0101b, divided by 32

; Setup Timer0 reload data
        MOVLW   80h
        MOVWX   TM0RLD          ; Set Timer0 reload data = 128

; Setup Timer0
        BSX     TM0STP          ; Timer0 stops counting
        CLRX    TM0             ; Clear Timer0 content

; Enable Timer0 and interrupt function
        MOVLW   1110 1111b
        MOVWX   INTIF           ; Clear Timer0 request interrupt flag
        BSX     TM0IE           ; Enable Timer0 interrupt function
        BCX     TM0STP          ; Enable Timer0 counting
```

Timer0 interrupt frequency = Fsys / 2 / TM0PSC / (256-TM0RLD),

Fsys = 8 MHz, TM0PSC = div 32, TM0RLD = 128

Timer0 interrupt frequency = 8 MHz / 2 / 32 / (256-128) = 0.976 KHz

The following timing diagram describes the Timer0 works in Counter mode.

If TM0CKS=1 then Timer0 counter source clock is from TM0CKI pin. TM0CKI signal is synchronized by instruction cycle (Fsys/2) that means the high/low time durations of TM0CKI must be longer than one instruction cycle time (Fsys/2) to guarantee each TM0CKI's change will be detected correctly by the synchronizer.

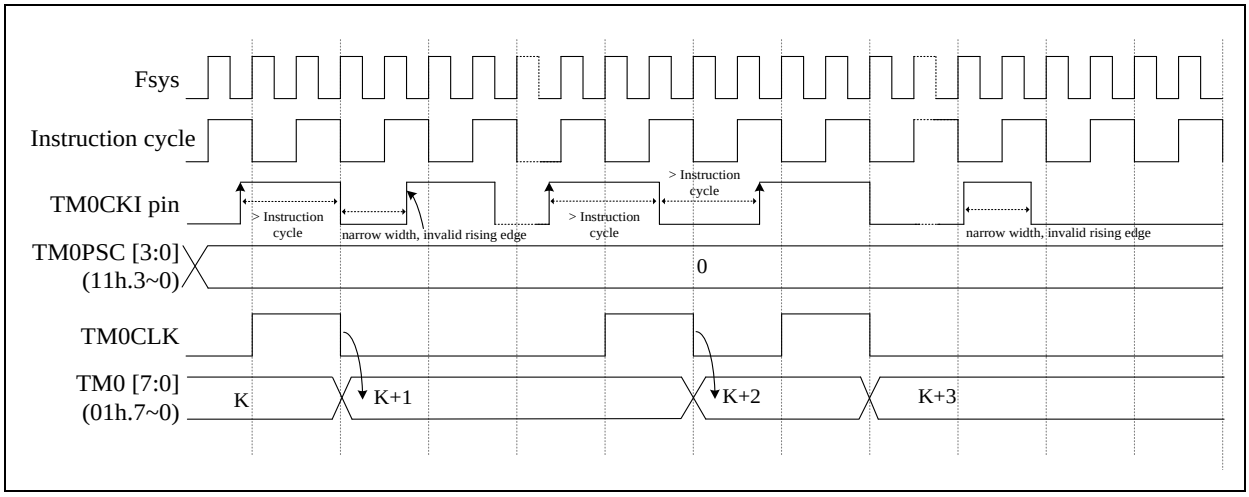

Timer0 works in Counter mode for TM0CKI (TM0EDG=0), TM0CKS=1

◇ Example: Setup TM0 work in Counter mode and clock source from TM0CKI pin (PA2)

```
; Setup Timer0 clock source and divider
        MOVLW   00110000B       ; TM0EDG = 1, counting edge is falling edge
        MOVWX   TM0CTL          ; TM0CKS = 1, Timer0 clock is TM0CKI
                                ; TM0PSC = 0000b, divided by 1
; Setup Timer0
        BSX     TM0STP          ; Timer0 stops counting
        CLRX    TM0             ; Clear Timer0 content

; Enable Timer0 and read Timer0 counter
        BCX     TM0STP          ; Enable Timer0 counting
        …
        BSX     TM0STP          ; Timer0 stops counting
        MOVXW   TM0             ; Read Timer0 content
```

01h	Bit 7	Bit 6	Bit 5	Bit 4	Bit 3	Bit 2	Bit 1	Bit 0
TM0	TM0							
R/W	R/W							
Reset	0	0	0	0	0	0	0	0

01h.7~0 **TM0:** Timer0 content

0Bh	Bit 7	Bit 6	Bit 5	Bit 4	Bit 3	Bit 2	Bit 1	Bit 0
INTIE	ADCIE	T2IE	TM1IE	TM0IE	WKTIE	INT2IE	INT1IE	INT0IE
R/W	R/W	R/W	R/W	R/W	R/W	R/W	R/W	R/W
Reset	0	0	0	0	0	0	0	0

0Bh.4 **TM0IE:** Timer0 interrupt enable
0: disable
1: enable

0Ch	Bit 7	Bit 6	Bit 5	Bit 4	Bit 3	Bit 2	Bit 1	Bit 0
INTIF	ADCIF	T2IF	TM1IF	TM0IF	WKTIF	INT2IF	INT1IF	INT0IF
R/W	R/W	R/W	R/W	R/W	R/W	R/W	R/W	R/W
Reset	0	0	0	0	0	0	0	0

0Ch.4 **TM0IF:** Timer0 interrupt event pending flag
This bit is set by H/W while Timer0 overflows, write EFh to INTIF will clear this flag

10h	Bit 7	Bit 6	Bit 5	Bit 4	Bit 3	Bit 2	Bit 1	Bit 0
TM0RLD	TM0RLD							
R/W	R/W							
Reset	0	0	0	0	0	0	0	0

10h.7~0 **TM0RLD:** Timer0 reload data

11h	Bit 7	Bit 6	Bit 5	Bit 4	Bit 3	Bit 2	Bit 1	Bit 0
TM0CTL	–	TM0STP	TM0EDG	TM0CKS	TM0PSC			
R/W	–	R/W	R/W	R/W	R/W			
Reset	–	0	0	0	0	0	0	0

11h.6 **TM0STP:** Stop Timer0
0: Timer0 runs
1: Timer0 stops

11h.5 **TM0EDG:** Timer0 prescaler counting edge for TM0CKI pin
0: rising edge
1: falling edge

11h.4 **TM0CKS:** Timer0 prescaler clock source
0: Fsys/2
1: TM0CKI pin (PA2 pin)

11h.3~0 **TM0PSC:** Timer0 prescaler. Timer0 prescaler clock source divided by

0000: 1	0001: 2	0010: 4	0011: 8
0100: 16	0101: 32	0110: 64	0111: 128
1xxx: 256			

6.3 Timer1

Timer1(TM1) (12h.7~0) is an 8-bit wide register. It can be read or written as any other register. Besides, Timer1 increases itself periodically and automatically reloads a new "offset value" (TM1RLD) while it rolls over based on the pre-scaled instruction clock (Fsys/2). The Timer1 increase rate is determined by TM1PSC register. It generates Timer1 interrupt if the TM1IE bit is set. Timer1 can be stopped counting if the TM1STP bit is set.

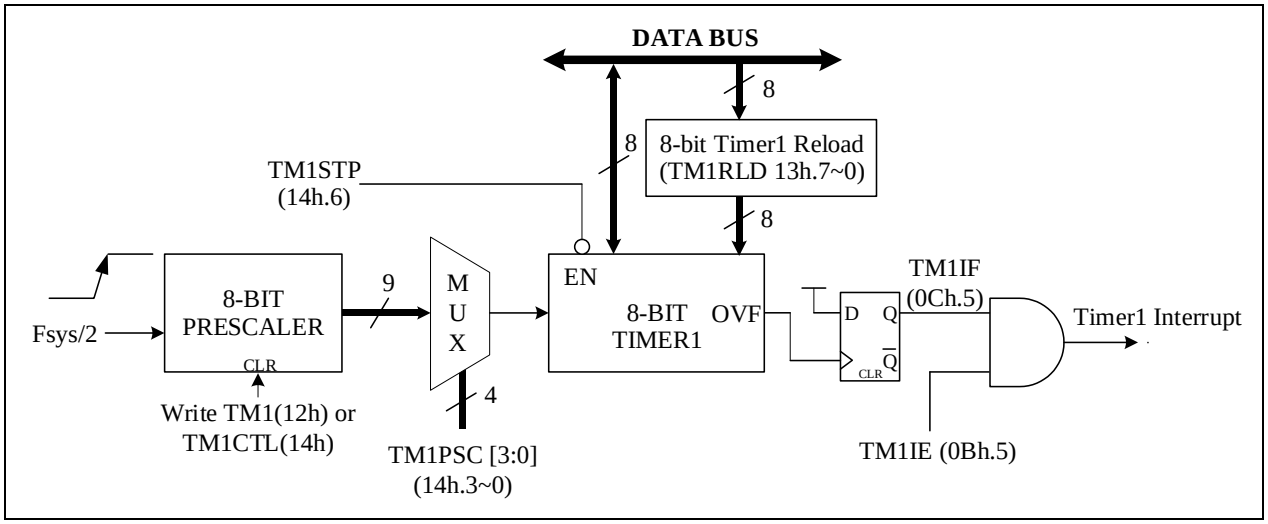

Timer1 Block Diagram

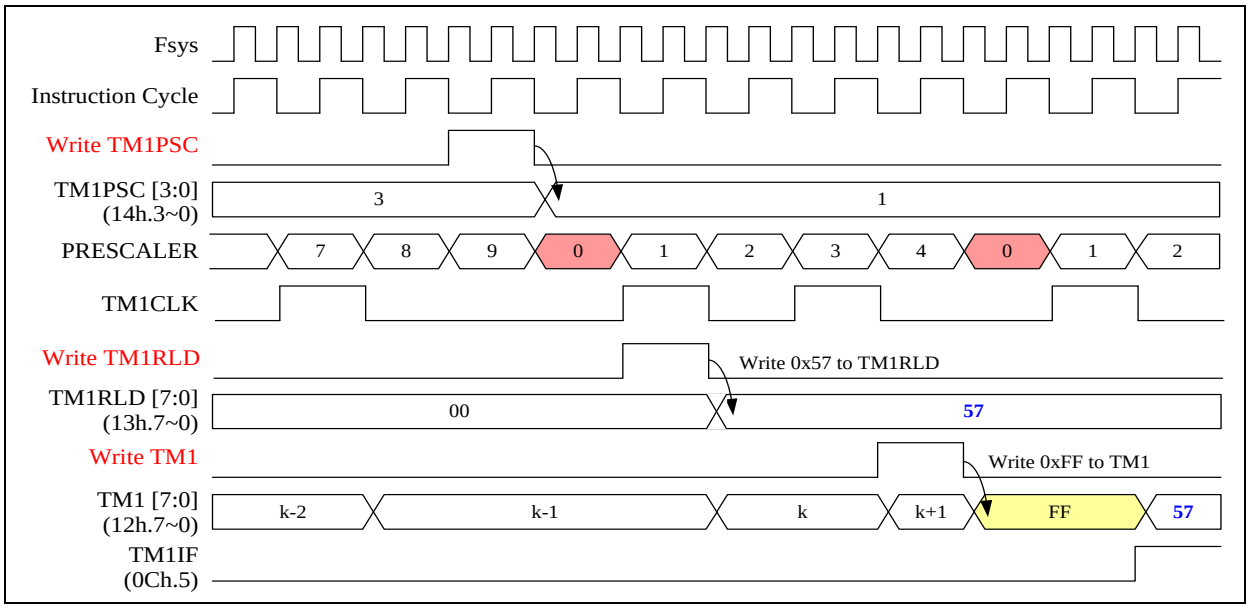

Timer1 Timing Diagram

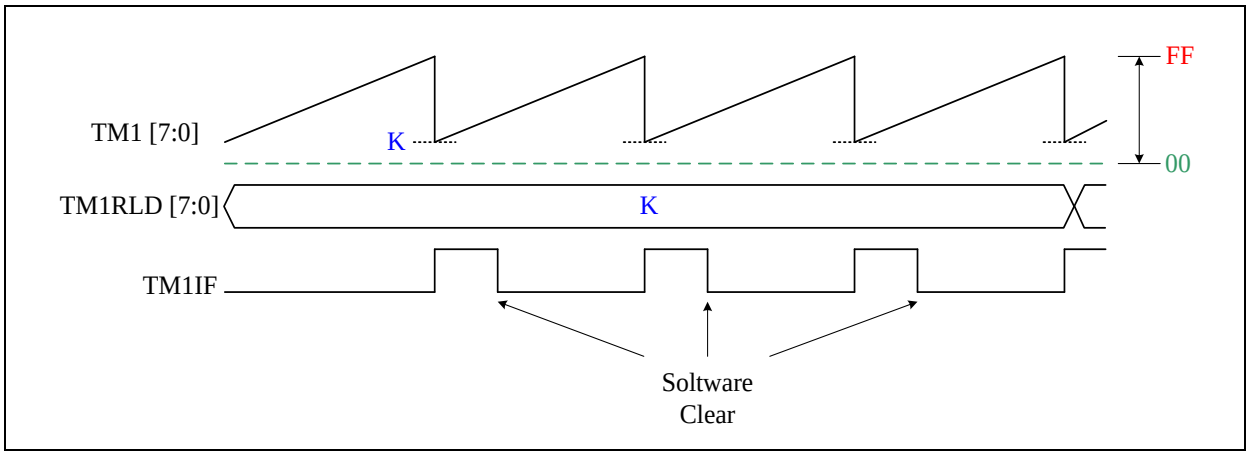

Timer1 Reload Diagram

◇ Example: CPU is running in SLOW mode, Fsys = Slow-clock / CPUPSC = 32.75 KHz

```
; Setup Timer1 clock source and divider
        MOVLW   00000011b
        MOVWX   TM1CTL          ; TM1PSC = 0011b, divided by 8

; Setup Timer1 reload data
        MOVLW   FFh
        MOVWX   TM1RLD          ; Set Timer1 reload data = 255

; Setup Timer1
        BSX     TM1STP          ; Timer1 stops counting
        CLRX    TM1             ; Clear Timer1 content

; Enable Timer1 and interrupt function
        MOVLW   11011111b
        MOVWX   INTIF           ; Clear Timer1 request interrupt flag
        BSX     TM1IE           ; Enable Timer1 interrupt function
        BCX     TM1STP          ; Enable Timer1 counting
```

Timer1 interrupt frequency = Fsys / 2 / TM1PSC / (256-TM1RLD),
Fsys = 32.75 KHz, TM1PSC = div 8, TM1RLD = 255
Timer1 interrupt frequency = 32.75 KHz / 2 / 8 / (256-255) = 2.047 KHz

0Bh	Bit 7	Bit 6	Bit 5	Bit 4	Bit 3	Bit 2	Bit 1	Bit 0
INTIE	ADCIE	T2IE	TM1IE	TM0IE	WKTIE	INT2IE	INT1IE	INT0IE
R/W	R/W	R/W	R/W	R/W	R/W	R/W	R/W	R/W
Reset	0	0	0	0	0	0	0	0

0Bh.5 **TM1IE:** Timer1 interrupt enable
0: disable
1: enable

0Ch	Bit 7	Bit 6	Bit 5	Bit 4	Bit 3	Bit 2	Bit 1	Bit 0
INTIF	ADCIF	T2IF	TM1IF	TM0IF	WKTIF	INT2IF	INT1IF	INT0IF
R/W	R/W	R/W	R/W	R/W	R/W	R/W	R/W	R/W
Reset	0	0	0	0	0	0	0	0

0Ch.5 **TM1IF:** Timer1 interrupt event pending flag
This bit is set by H/W while Timer1 overflows, write DFh to INTIF will clear this flag

12h	Bit 7	Bit 6	Bit 5	Bit 4	Bit 3	Bit 2	Bit 1	Bit 0
TM1	TM1							
R/W	R/W							
Reset	0	0	0	0	0	0	0	0

12h.7~0 **TM1:** Timer1 content

13h	Bit 7	Bit 6	Bit 5	Bit 4	Bit 3	Bit 2	Bit 1	Bit 0
TM1RLD	TM1RLD							
R/W	R/W							
Reset	0	0	0	0	0	0	0	0

13h.7~0 **TM1RLD:** Timer1 reload data

14h	Bit 7	Bit 6	Bit 5	Bit 4	Bit 3	Bit 2	Bit 1	Bit 0
TM1CTL	–	TM1STP	–	–	TM1PSC			
R/W	–	R/W	–	–	R/W			
Reset	–	0	–	–	0	0	0	0

14h.6 **TM1STP:** Stop Timer1
0: Timer1 runs
1: Timer1 stops

14h.3~0 **TM1PSC:** Timer1 prescaler. Timer1 prescaler clock source divided by
0000: 1 0001: 2 0010: 4 0011: 8
0100: 16 0101: 32 0110: 64 0111: 128
1xxx: 256

6.4 T2:15-bit Timer

The T2 is a 15-bit counter and the clock sources are from Slow-clock, Fsys/128, or FIRC/512 (16 MHz/512). It is used to generate time base interrupt and T2 counter block clock. The T2 content cannot be read by instructions. It generates interrupt flag T2IF (0Ch.6) with the clock divided by 32768/16384/8192/128 depends on T2PSC[1:0] (15h.1~0) register bits. The following figure shows the block diagram of T2.

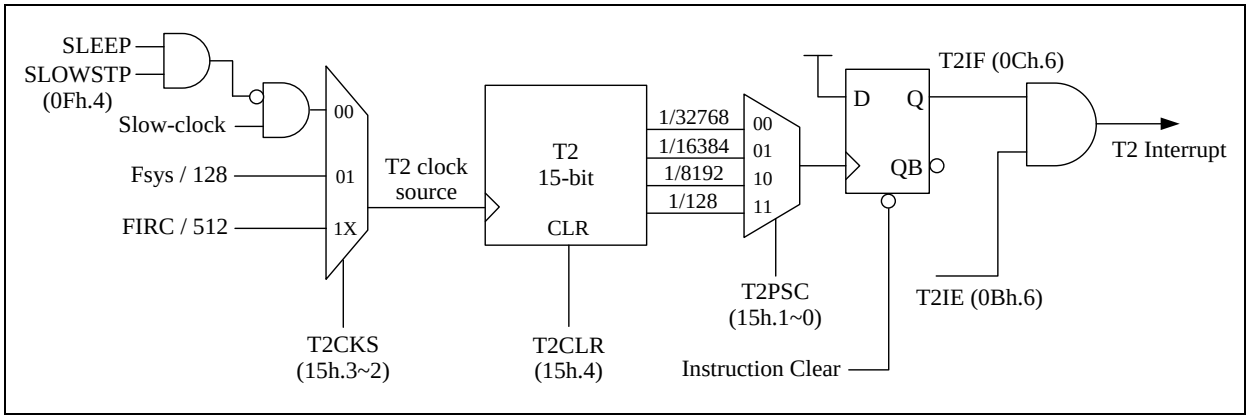

T2 Block Diagram

◇ Example: CPU is running at FAST mode, Fsys = Fast-clock / CPUPSC = FIRC / 2 = 8 MHz

```
; Setup T2 clock source and divider
        MOVLW   00000101b       ; T2CKS(15h.3~2) = 1, T2 clock source is Fsys/128
        MOVWX   T2CTL           ; T2PSC(15h.1~0) = 1, divided by 16384
        BSX     T2CLR           ; T2CLR = 1, clear T2 counter

; Enable T2 interrupt function
        MOVLW   10111111b
        MOVWX   INTIF           ; Clear T2 request interrupt flag
        BSX     T2IE            ; Enable T2 interrupt function
        BCX     T2CLR           ; T2CLR = 0, Enable T2 counting
```

T2 clock source is Fsys / 128 = 8 MHz / 128 = 62500 Hz, T2PSC = 16384

T2 frequency = 62500 Hz / 16384 = 3.815 Hz

0Bh	Bit 7	Bit 6	Bit 5	Bit 4	Bit 3	Bit 2	Bit 1	Bit 0
INTIE	ADCIE	T2IE	TM1IE	TM0IE	WKTIE	INT2IE	INT1IE	INT0IE
R/W	R/W	R/W	R/W	R/W	R/W	R/W	R/W	R/W
Reset	0	0	0	0	0	0	0	0

0Bh.6 **T2IE:** T2 interrupt enable
0: disable
1: enable

0Ch	Bit 7	Bit 6	Bit 5	Bit 4	Bit 3	Bit 2	Bit 1	Bit 0
INTIF	ADCIF	T2IF	TM1IF	TM0IF	WKTIF	INT2IF	INT1IF	INT0IF
R/W	R/W	R/W	R/W	R/W	R/W	R/W	R/W	R/W
Reset	0	0	0	0	0	0	0	0

0Ch.6 **T2IF:** T2 interrupt event pending flag
This bit is set by H/W while T2 overflows, write BFh to INTIF will clear this flag

0Fh	Bit 7	Bit 6	Bit 5	Bit 4	Bit 3	Bit 2	Bit 1	Bit 0
CLKCTL	SCKTYP	FCKTYPE	–	SLOWSTP	FASTSTP	CPUCKS	CPUPSC	
R/W	R/W	R/W	–	R/W	R/W	R/W	R/W	R/W
Reset	0	0	–	0	1	0	1	1

0Fh.4 **SLOWSTP:** Stop Slow-clock after execute SLEEP instruction
0: Slow-clock keeps running after execute SLEEP instruction
1: Slow-clock stops running after execute SLEEP instruction

15h	Bit 7	Bit 6	Bit 5	Bit 4	Bit 3	Bit 2	Bit 1	Bit 0
T2CTL	–	–	–	T2CLR	T2CKS		T2PSC	
R/W	–	–	–	R/W	R/W		R/W	
Reset	–	–	–	0	0	0	0	0

15h.4 **T2CLR:** Clear and stop T2
0: T2 runs
1: T2 clear and stops

15h.3~2 **T2CKS:** T2 clock source selection
00: Slow-clock
01: Fsys/128
1x: FIRC/512 (16 MHz/512)

15h.1~0 **T2PSC:** T2 prescaler. T2 clock source divided by
00: 32768
01: 16384
10: 8192
11: 128

6.5 PWM: 16 bits PWM

There are six PWMs in this chip. PWM0~PWM5 have independent 16-bit duty control register, and share a set of 16-bit period register. The PWM can generate varies frequency waveform with 65536 duty resolution on the basis of the PWM clock. The PWM clock can select Fsys, FIRC/256, FIRC (16 MHz), or FIRC*2 (32 MHz) as its clock source. The following takes PWM0 and PWM1 as an example for description.

The 16-bit PWMPRD, PWMxD(x=0~5) registers both have a low byte and high byte structure. The high bytes can be directly accessed, but the low bytes can only be accessed via an internal 8-bit buffer, reading or writing to these register pairs must be carried out in a specific way. The important point to notes is that data transfer to and from the 8-bit buffer and its related low byte only takes place when write or read operation to its corresponding high bytes is executed. ***Briefly speaking, write low byte first and then high byte; read high byte first and then low byte***.

If PWMEN is cleared, the PWM0~5 will be cleared and stopped, otherwise the PWM0~5 remain running. PWMx(x=0~5) share the same period register which can be set by writing the period value to the PWMPRDH and PWMPRDL registers. After writing the PWMxDH(x=0~5) or PWMPRDH register, H/W will update PWM period and duty immediately. PWM0~5 share an interrupt flag, and an interrupt flag is generated at the end of the period.

Only PWM0 has dead-zone(non-overlap) control, and is divided into PWM0P and PWM0N outputs, and the remaining PWM1~PWM5 have no dead-zone(non-overlap) control. The PWM1~5 outputs are PWM1O~PWM5O. User can use pin mode setting to output PWMxO to the corresponding IO pin, refer to Chapter 5 for more information on pin settings.

For reading and writing of 16-bit PWM period and duty, it is recommended to update the data only in the main program, or only update the data in the interrupt, to avoid possible errors.

6.5.1 PWM0

If PWMEN is cleared, the PWM0~5 will be cleared and stopped, otherwise the PWM0~5 remain running. The PWM0 structure is shown as follow. The PWM0 duty cycle can be changed by writing to PWM0DH and PWM0DL. The PWM0 output signal resets to a low level whenever the 16-bit base counter matches the 16-bit PWM0 duty register {PWM0DH, PWM0DL}. The PWM0 period can be set by writing the period value to the PWMPRDH and PWMPRDL registers. After writing the PWM0DH or PWMPRDH register, H/W will update PWM period and duty immediately. PWM0~5 share an interrupt flag, and an interrupt flag is generated at the end of the period.

The PWM0 has two operation modes, normal mode and half-bridge mode.

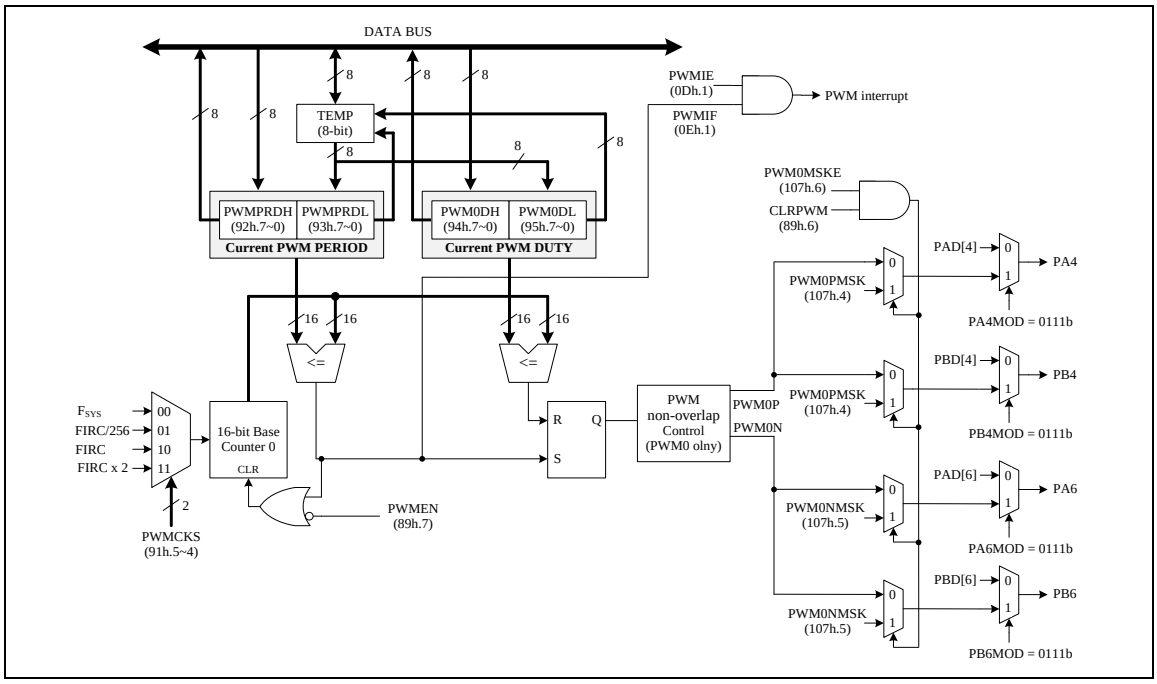

PWM0 Block Diagram

6.5.1.1 Normal Mode

The normal mode PWM is a simple structure, which switches its output high and low at uniform repeatable intervals. The PWM0D is the output duty cycle, and the output period is PWMPRD+1.

Only PWM0 can be output via PWM0P and PWM0N with four different modes. The edges of the PWM pulse can be separated with 16 different dead-zone(non-overlap) clocks intervals (Tnov). The width of Tnov can be selected by PWM0DZ (89h.3~0) within 0~15 PWM clock. The default output form is Mode0. The waveforms of the four output modes are shown below.

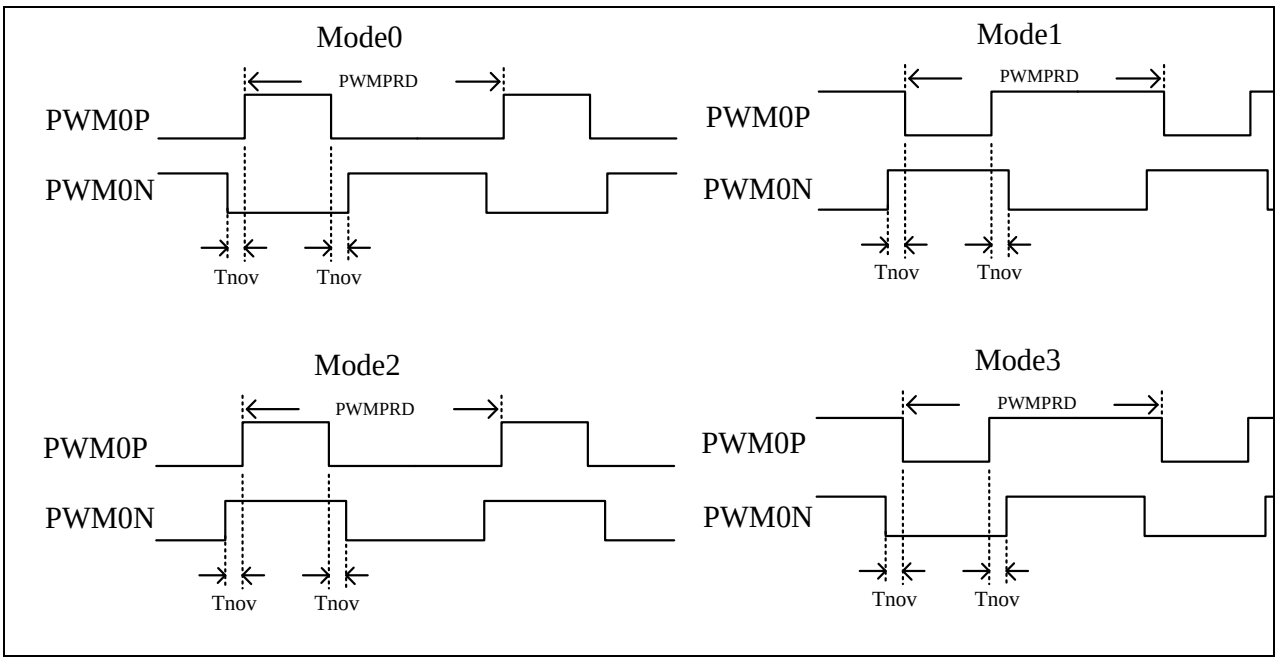

PWM0 Normal Mode Output Modes

◇ Example:

```
; Setup Pin mode
        MOVLW   xxxx0111b       ;
        MOVWX   PAMOD54         ; PA4 Pin as PWM0P

        MOVLW   xxxx0111b       ;
        MOVWX   PAMOD76         ; PA6 Pin as PWM0N

; Setup PWM0 clock source select
        MOVLW   xx10xxxxb       ;
        MOVWX   OPTION2         ; FIRC 16 MHz as PWM clock source

; Setup PWM0 period and duty setting
        MOVLW   FFh
        MOVWX   PWMPRDL         ; write sequence: PWMPRDL then PWMPRDH
        MOVLW   7Fh
        MOVWX   PWMPRDH         ; Set PWM period = 7FFFh

        MOVLW   00h
        MOVWX   PWM0DL          ; write sequence: PWM0DL then PWM0DH
        MOVLW   40h
        MOVWX   PWM0DH          ; Set PWM0 duty = 4000h

; Setup PWM0 enable and dead-zone(non-overlap) control
        MOVLW   10000000b       ; 89h.7 = 1, PWM0 enable
        MOVWX   PWMCTL          ; 89h.5~4 = 0, PWM0 Mode0 output
                                ; 89h.3~0 = 0, PWM0 dead-zone(non-overlap) output
                                ; disable
```

Example:

PWM0 clock source = FIRC 16 MHz, PWM period = 7FFFh, PWM duty = 4000h

PWM0 output frequency = 16 MHz / (period+1) = 16 MHz / 32768 = 488 Hz.

PWM0 output duty = duty / (period+1) = 50 %.

6.5.1.2 Half-Bridge Mode

The half-bridge mode PWM is similar to the normal mode but **Dead-zone(non-overlap) is prohibited in half-bridge mode** (SFR PWM0DZ must be 0). It has two frames in a period, PWM0P only output in the first frame, PWM0N only output in the second frame. The width of these two frames must be same, so their width is the integer part of PWM0PRD/2. Because each output channel only output in one frame, the maximum duty cycle is same as the width of a frame. If the PWM0D is larger than PWM0PRD/2, H/W will force set the duty cycle to PWM0PRD/2. Following figure shows the output waveform and the output modes.

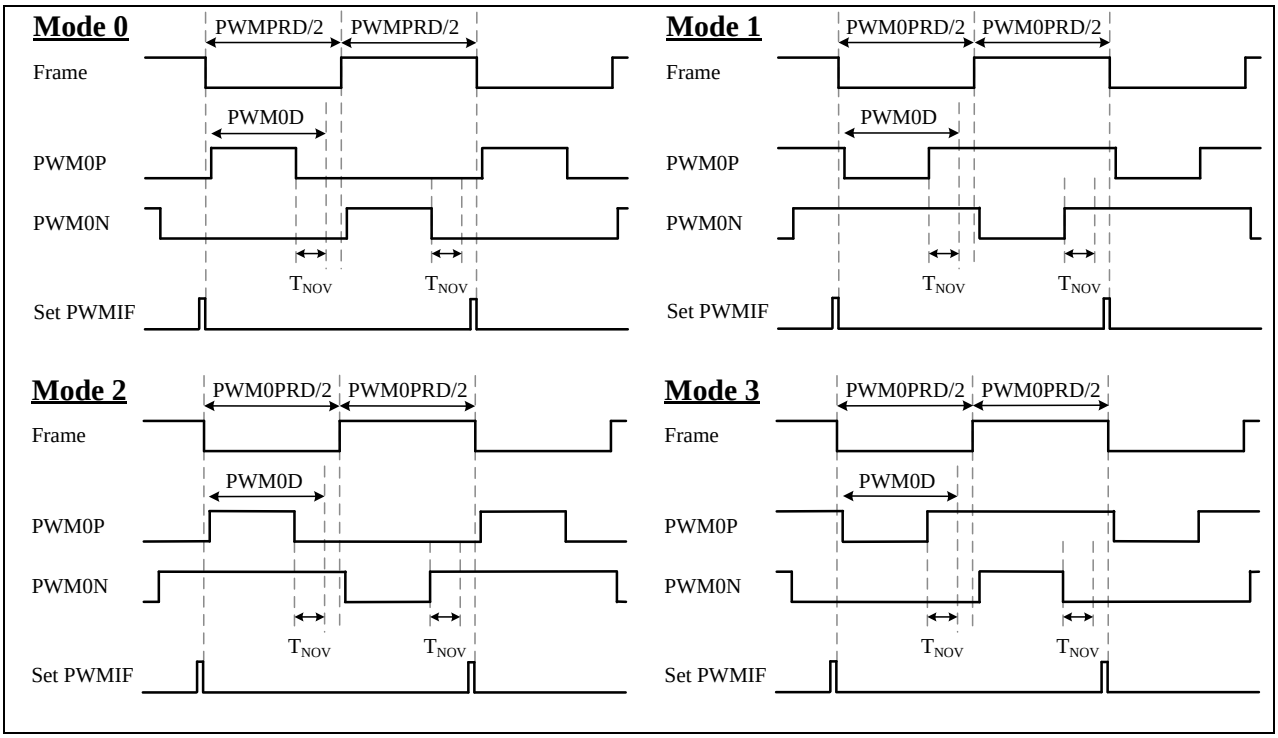

PWM0 Half-Bridge Mode Output Modes

6.5.2 PWM1~5

If PWMEN is cleared, the PWM0~5 will be cleared and stopped, otherwise the PWM0~5 remain running. The structure of PWM1 is shown bellow and PWM2~5 are like. The PWM1~5 duty cycle can be changed by writing to PWMxDH(x=1~5) and PWMxDL(x=1~5). The PWM1~5 output signal resets to a low level whenever the 16-bit base counter matches the 16-bit PWM1~5 duty register {PWMxDH, PWMxDL}(x=1~5). The PWM1~5 periods, which is shared with PWM0 period, can be set by writing the period value to the PWMPRDH and PWMPRDL registers. After writing the PWMxDH(x=1~5) or PWMPRDH register, H/W will update PWM period and duty immediately. PWM0~5 share an interrupt flag, and an interrupt flag is generated at the end of the period.

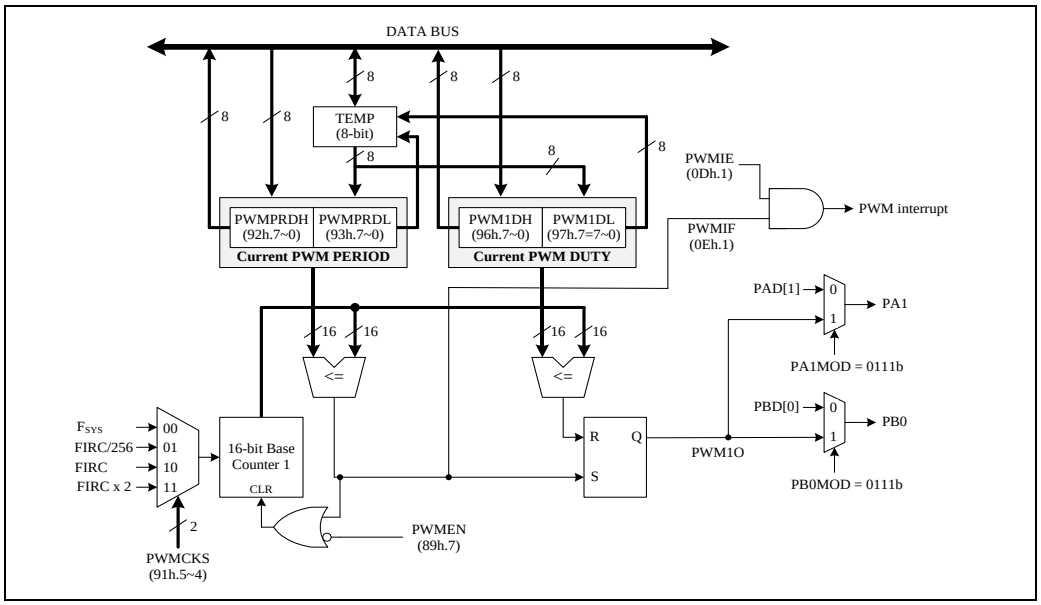

PWM1 Block Diagram

0Dh	Bit 7	Bit 6	Bit 5	Bit 4	Bit 3	Bit 2	Bit 1	Bit 0
INTIE1	–	PCIE	EEPIE	CMPIE	–	–	PWMIE	LVDIE
R/W	–	R/W	R/W	R/W	–	–	R/W	R/W
Reset	–	0	0	0	–	–	0	0

0Dh.1 **PWMIE:** PWM interrupt enable
0: disable
1: enable

0Eh	Bit 7	Bit 6	Bit 5	Bit 4	Bit 3	Bit 2	Bit 1	Bit 0
INTIF1	–	PCIF	EEPIF	CMPIF	–	–	PWMIF	LVDIF
R/W	–	R/W	R/W	R/W	–	–	R/W	R/W
Reset	–	0	0	0	–	–	0	0

0Eh.1 **PWMIF:** PWM interrupt event pending flag
This bit is set by H/W after PWM period counter roll over, write FDh to INTIF1 will clear this flag

89h	Bit 7	Bit 6	Bit 5	Bit 4	Bit 3	Bit 2	Bit 1	Bit 0
PWMCTL	PWMEN	CLRPWM	PWM0OM		PWM0DZ			
R/W	R/W	R/W	R/W		R/W			
Reset	0	0	0	0	0	0	0	0

89h.7 **PWMEN:** PWM0~5 enable
0: disable
1: enable

89h.6 **CLRPWM:** Clear PWM
0: not clear
1: clear

89h.5~4 **PWM0OM:** PWM0 output mode select
00: Mode0
01: Mode1
10: Mode2
11: Mode3

89h.3~0 **PWM0DZ:** PWM0 dead-zone(non-overlap) control
0000: no dead-zone(non-overlap)
0001: dead-zone(non-overlap) width are 1 PWM clock cycle
0010: dead-zone(non-overlap) width are 2 PWM clock cycles
…
1111: dead-zone(non-overlap) width are 15 PWM clock cycles

91h	Bit 7	Bit 6	Bit 5	Bit 4	Bit 3	Bit 2	Bit 1	Bit 0
OPTION2	–	–	PWMCKS		–	INT2SEL	INT1SEL	INT0SEL
R/W	–	–	R/W		–	R/W	R/W	R/W
Reset	–	–	0	0	–	0	0	0

91h.5~4 **PWMCKS:** PWM clock source select
00: Fsys
01: FIRC/256
10: FIRC (16 MHz)
11: FIRC x 2 (32 MHz). Refer to the graph of minimal operating voltage for PWMCKS=FIRC x 2.

92h	Bit 7	Bit 6	Bit 5	Bit 4	Bit 3	Bit 2	Bit 1	Bit 0
PWMPRDH	PWMPRDH							
R/W	R/W							
Reset	1	1	1	1	1	1	1	1

92h.7~0 **PWMPRDH:** PWM0~5 period high byte
write sequence: PWMPRDL then PWMPRDH
read sequence: PWMPRDH then PWMPRDL

93h	Bit 7	Bit 6	Bit 5	Bit 4	Bit 3	Bit 2	Bit 1	Bit 0
PWMPRDL	PWMPRDL							
R/W	R/W							
Reset	1	1	1	1	1	1	1	1

93h.7~0 **PWMPRDL:** PWM0~5 period low byte
write sequence: PWMPRDL then PWMPRDH
read sequence: PWMPRDH then PWMPRDL

94h	Bit 7	Bit 6	Bit 5	Bit 4	Bit 3	Bit 2	Bit 1	Bit 0
PWM0DH	PWM0DH							
R/W	R/W							
Reset	1	0	0	0	0	0	0	0

94h.7~0 **PWM0DH:** PWM0 duty high byte
write sequence: PWMxDL then PWMxDH
read sequence: PWMxDH then PWMxDL

95h	Bit 7	Bit 6	Bit 5	Bit 4	Bit 3	Bit 2	Bit 1	Bit 0
PWM0DL	PWM0DL							
R/W	R/W							
Reset	0	0	0	0	0	0	0	0

95h.7~0 **PWM0DL:** PWM0 duty low byte
write sequence: PWMxDL then PWMxDH
read sequence: PWMxDH then PWMxDL

96h	Bit 7	Bit 6	Bit 5	Bit 4	Bit 3	Bit 2	Bit 1	Bit 0
PWM1DH	PWM1DH							
R/W	R/W							
Reset	1	0	0	0	0	0	0	0

96h.7~0 **PWM1DH:** PWM1 duty high byte
write sequence: PWMxDL then PWMxDH
read sequence: PWMxDH then PWMxDL

97h	Bit 7	Bit 6	Bit 5	Bit 4	Bit 3	Bit 2	Bit 1	Bit 0
PWM1DL	PWM1DL							
R/W	R/W							
Reset	0	0	0	0	0	0	0	0

97h.7~0 **PWM1DL:** PWM1 duty low byte
write sequence: PWMxDL then PWMxDH
read sequence: PWMxDH then PWMxDL

98h	Bit 7	Bit 6	Bit 5	Bit 4	Bit 3	Bit 2	Bit 1	Bit 0
PWM2DH	PWM2DH							
R/W	R/W							
Reset	1	0	0	0	0	0	0	0

98h.7~0 **PWM2DH:** PWM2 duty high byte
write sequence: PWMxDL then PWMxDH
read sequence: PWMxDH then PWMxDL

99h	Bit 7	Bit 6	Bit 5	Bit 4	Bit 3	Bit 2	Bit 1	Bit 0
PWM2DL	PWM2DL							
R/W	R/W							
Reset	0	0	0	0	0	0	0	0

99h.7~0 **PWM2DL:** PWM2 duty low byte
write sequence: PWMxDL then PWMxDH
read sequence: PWMxDH then PWMxDL

9Ah	Bit 7	Bit 6	Bit 5	Bit 4	Bit 3	Bit 2	Bit 1	Bit 0
PWM3DH	PWM3DH							
R/W	R/W							
Reset	1	0	0	0	0	0	0	0

9Ah.7~0 **PWM3DH:** PWM3 duty high byte
write sequence: PWMxDL then PWMxDH
read sequence: PWMxDH then PWMxDL

9Bh	Bit 7	Bit 6	Bit 5	Bit 4	Bit 3	Bit 2	Bit 1	Bit 0
PWM3DL	PWM3DL							
R/W	R/W							
Reset	0	0	0	0	0	0	0	0

9Bh.7~0 **PWM3DL:** PWM3 duty low byte
write sequence: PWMxDL then PWMxDH
read sequence: PWMxDH then PWMxDL

9Ch	Bit 7	Bit 6	Bit 5	Bit 4	Bit 3	Bit 2	Bit 1	Bit 0
PWM4DH	PWM4DH							
R/W	R/W							
Reset	1	0	0	0	0	0	0	0

9Ch.7~0 **PWM4DH:** PWM4 duty high byte
write sequence: PWMxDL then PWMxDH
read sequence: PWMxDH then PWMxDL

9Dh	Bit 7	Bit 6	Bit 5	Bit 4	Bit 3	Bit 2	Bit 1	Bit 0
PWM4DL	PWM4DL							
R/W	R/W							
Reset	0	0	0	0	0	0	0	0

9Dh.7~0 **PWM4DL:** PWM4 duty low byte
write sequence: PWMxDL then PWMxDH
read sequence: PWMxDH then PWMxDL

9Eh	Bit 7	Bit 6	Bit 5	Bit 4	Bit 3	Bit 2	Bit 1	Bit 0
PWM5DH	PWM5DH							
R/W	R/W							
Reset	1	0	0	0	0	0	0	0

9Eh.7~0 **PWM5DH:** PWM5 duty high byte
write sequence: PWMxDL then PWMxDH
read sequence: PWMxDH then PWMxDL

9Fh	Bit 7	Bit 6	Bit 5	Bit 4	Bit 3	Bit 2	Bit 1	Bit 0
PWM5DL	PWM5DL							
R/W	R/W							
Reset	0	0	0	0	0	0	0	0

9Fh.7~0 **PWM5DL:** PWM5 duty low byte
write sequence: PWMxDL then PWMxDH
read sequence: PWMxDH then PWMxDL

107h	Bit 7	Bit 6	Bit 5	Bit 4	Bit 3	Bit 2	Bit 1	Bit 0
PWMCTL2	PWM0MOD	PWM0MSKE	PWM0NMSK	PWM0PMSK	–	–	–	–
R/W	R/W	R/W	R/W	R/W	–	–	–	–
Reset	0	0	0	0	–	–	–	–

107h.7 **PWM0MOD:** PWM0 mode select
0: Normal mode
1: Half-bridge mode

107h.6 **PWM0MSKE:** PWM0 mask output enable
0: Disable
1: Enable, PWM0P/PWM0N output data by PWM0PMSK/PWM0NMSK while CLRPWM=1

107h.5 **PWM0NMSK:** PWM0N mask data
If CLRPWM=1 and PMW0MSKE=1, PWM0N will output this mask data.

107h.4 **PWM0PMSK:** PWM0P mask data
If CLRPWM=1 and PMW0MSKE=1, PWM0P will output this mask data.

6.6 Analog-to-Digital Converter

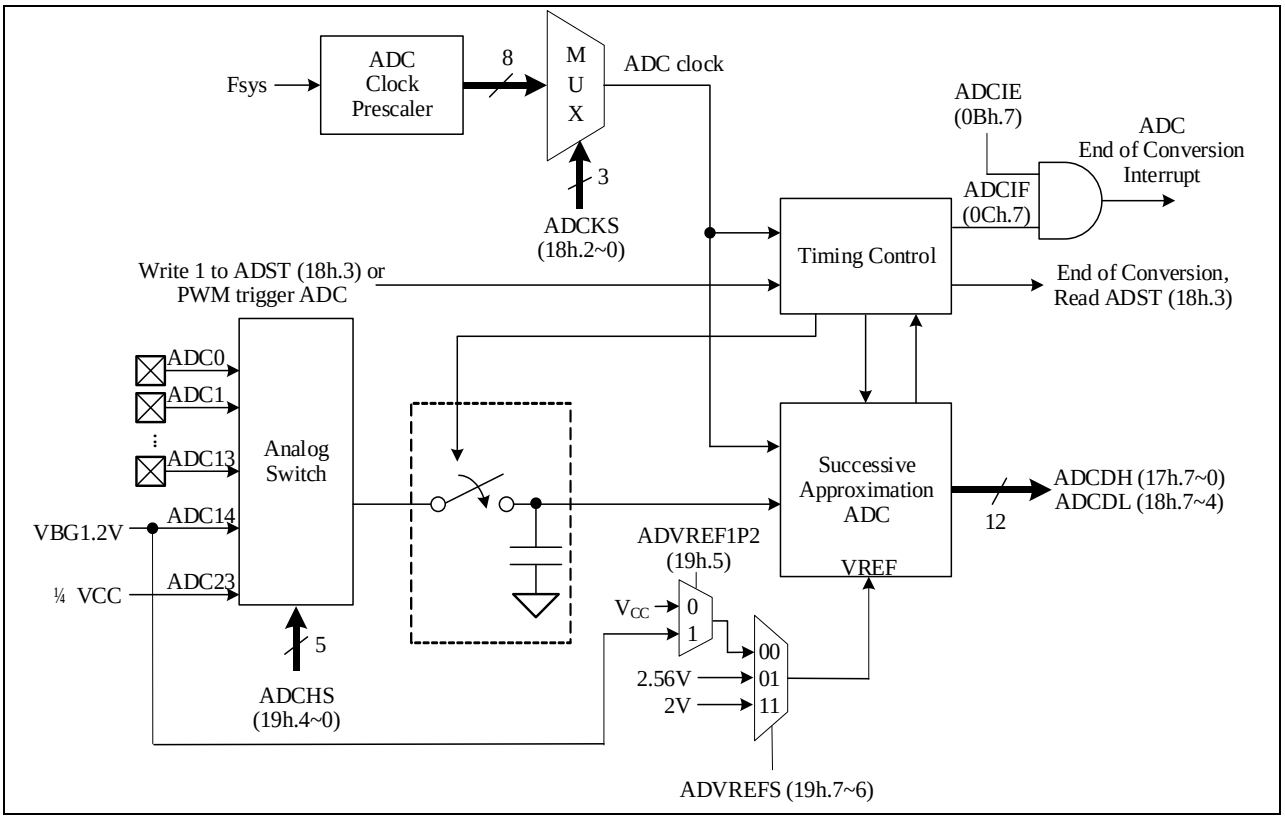

ADC Block Diagram

6.6.1 Normal Trigger ADC

The 12-bit ADC (Analog to Digital Converter) consists of a 16-channel analog input multiplexer, control register, clock generator, 12-bit successive approximation register, and output data register. To use the ADC, user needs to set ADCKS (18h.2~0) to choose a proper ADC clock frequency, which must be less than 1 MHz. User then launches the ADC conversion by setting the ADSTEOC (18h.3) control bit. After end of conversion, H/W automatic clears the ADSTEOC (18h.3) bit. User can poll this bit to know the conversion status. When the IO pin is used as the ADC input pin, the corresponding pin mode should be set to 0011b. User needs to set ADCHS (19h.4~0) to choose the input channel of ADC. Besides, there are some reference input channel can be selected, ADC14 is VBG and ADC23 is 1/4VCC for ADC. ADC reference voltage can be configured as V_{CC} or V_{BG} by ADVREFS (19h.7~6). Furthermore, if ADVREFS is changed to 2.56V or 2V, it will need 200uS warm-up stable time. When ADCHS is selected to VBG, ADVREFS must be set to V_{CC}, otherwise ADC conversion will be invalid.

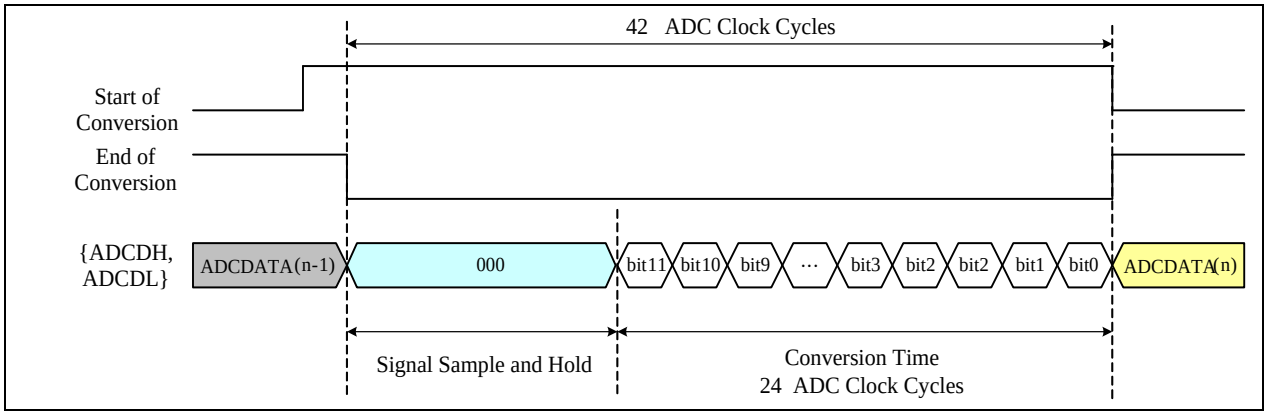

Example:

[CPU running at FAST mode , Fsys = FIRC 16 MHz]
ADC clock frequency = 1 MHz, ADC channel = ADC2 (PA2).

◇ Example:

```
        MOVLW   xxxx0011b       ; ADC2 (PA2) as ADC input
        MOVWX   PAMOD32

        MOVLW   00000100b       ; ADCKS = Fsys/16, ADC clock = 1 MHz
        MOVWX   ADCTL

        MOVLW   00000010b       ; ADC reference voltage select VCC
        MOVWX   ADCTL2          ; ADC input channel select ADC2

        BSX     ADSTEOC         ; 18h.3 (ADSTEOC), ADC start conversion.

WAIT_ADC:
        BTXSC   ADSTEOC         ; Wait ADC conversion finish.
        LGOTO   WAIT_ADC

        MOVXW   ADCDH           ; Read ADC output data bit 11~4
        MOVXW   ADCTL           ; Read ADC output data bit 3~0
        …
```

6.6.2 PWM Trigger ADC

The mechanism of PWM trigger ADC could be enabled by mean of non-zero ADCDLYT register. When PWM counter matches period register, hardware will start ADC conversion automatically after some delay time if the mechanism of PWM trigger ADC is enabled.

6.6.2.1 Normal PWM Trigger ADC

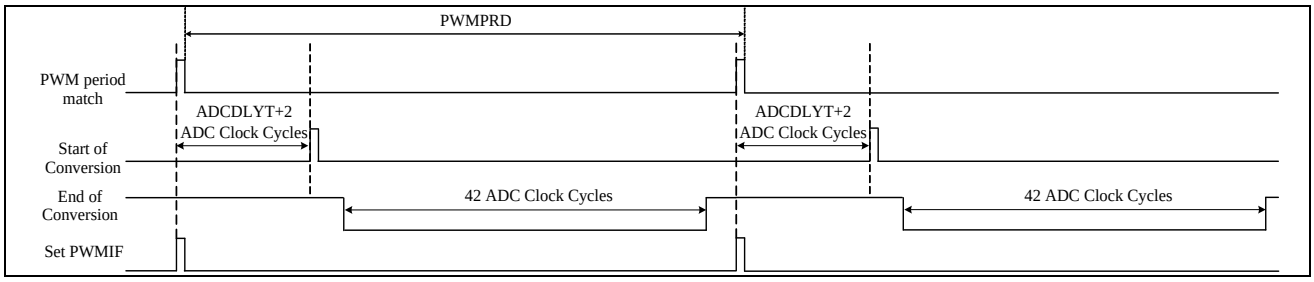

6.6.2.2 Half-Bridge PWM Trigger ADC

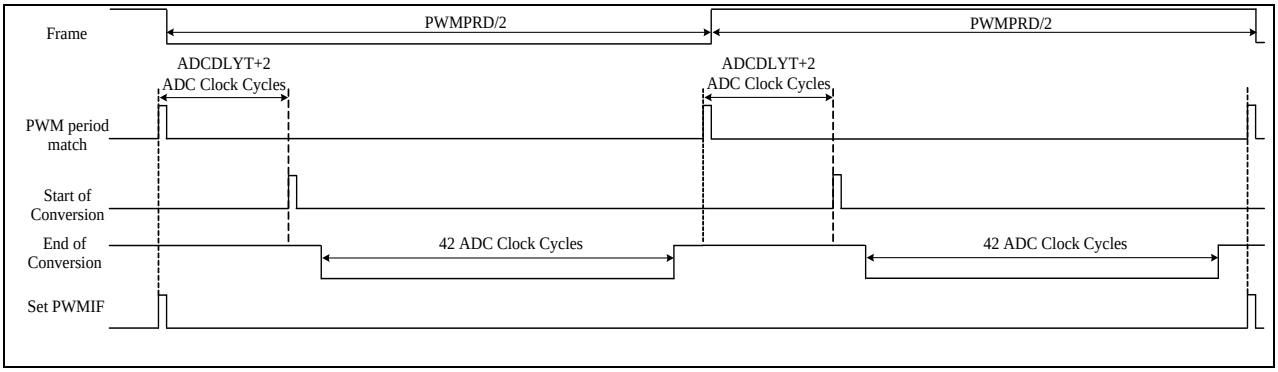

6.6.2.3 Unconverted Situation

When ADC conversion is under progress, PWM period matching event will not trigger new ADC conversion.

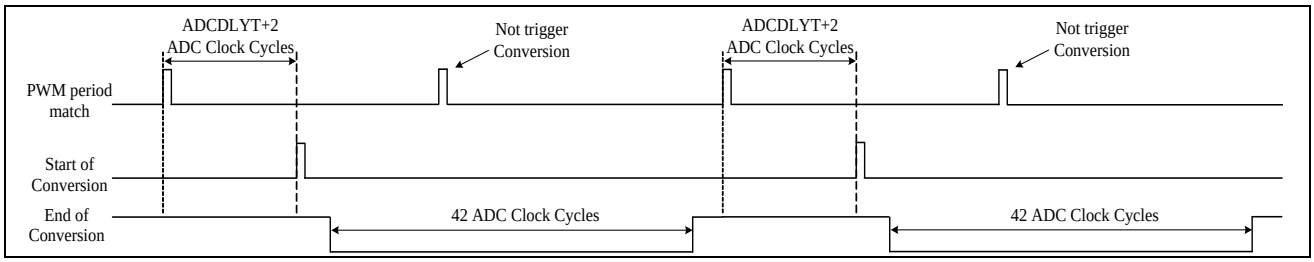

0Bh	Bit 7	Bit 6	Bit 5	Bit 4	Bit 3	Bit 2	Bit 1	Bit 0
INTIE	ADCIE	T2IE	TM1IE	TM0IE	WKTIE	INT2IE	INT1IE	INT0IE
R/W	R/W	R/W	R/W	R/W	R/W	R/W	R/W	R/W
Reset	0	0	0	0	0	0	0	0

0Bh.7 **ADCIE:** ADC interrupt enable
0: disable
1: enable

0Ch	Bit 7	Bit 6	Bit 5	Bit 4	Bit 3	Bit 2	Bit 1	Bit 0
INTIF	ADCIF	T2IF	TM1IF	TM0IF	WKTIF	INT2IF	INT1IF	INT0IF
R/W	R/W	R/W	R/W	R/W	R/W	R/W	R/W	R/W
Reset	0	0	0	0	0	0	0	0

0Ch.7 **ADCIF:** ADC interrupt event pending flag
This bit is set by H/W after ADC end of conversion, write 7Fh to INTIF will clear this flag

17h	Bit 7	Bit 6	Bit 5	Bit 4	Bit 3	Bit 2	Bit 1	Bit 0
ADCDH	ADCDH							
R/W	R							
Reset	–	–	–	–	–	–	–	–

17h.7~0 **ADCDH:** ADC output data bit 11~4

18h	Bit 7	Bit 6	Bit 5	Bit 4	Bit 3	Bit 2	Bit 1	Bit 0
ADCTL	ADCDL				ADSTEOC	ADCKS		
R/W	R				R/W	R/W		
Reset	–	–	–	–	0	0	0	0

18h.7~4 **ADCDL:** ADC output data bit 3~0

18h.3 **ADSTEOC(W):** ADC start bit.

0: H/W clear after end of conversion

1: ADC start conversion

Don't write ADSTEOC when PWM trigger ADC mode (i.e. ADCDLYT != 0) is utilized.

ADSTEOC(R): ADC start or end of conversion bit.

Normal mode(i.e. ADCDLYT = 0): ADC start

0: H/W clear after end of conversion

1: ADC start conversion

PWM trigger ADC mode(i.e. ADCDLYT != 0): ADC end of conversion

0: ADC is in conversion

1: ADC is end of conversion

18h.2~0 **ADCKS:** ADC clock frequency selection:

000: Fsys/256 100: Fsys/16

001: Fsys/128 101: Fsys/8

010: Fsys/64 110: Fsys/4

011: Fsys/32 111: Fsys/2

19h	Bit 7	Bit 6	Bit 5	Bit 4	Bit 3	Bit 2	Bit 1	Bit 0
ADCTL2	ADVREFS		ADVREF1P2	ADCHS				
R/W	R/W		R/W	R/W				
Reset	0	0	–	1	1	1	1	1

19h.7~6 **ADVREFS:** ADC reference voltage and V_{BG} output voltage select

00: ADC reference voltage is V_{CC} or 1.2V V_{BG} according to the value of ADVREF1P2. V_{BG} is 1.20V

01: ADC reference voltage is V_{BG}, V_{BG} is 2.56V

10: Reserved

11: ADC reference voltage is V_{BG}, V_{BG} is 2.00V(This feature can't not be emulated)(Don't use for the selection of DAC's VREF)

19h.5 **ADVREF1P2:** ADC 1.2V reference voltage select

0: ADC reference voltage is V_{CC} when ADVREFS=00. V_{BG} is 1.2V

1: ADC reference voltage is 1.2V V_{BG} when ADVREFS=00. V_{BG} is 1.2V(This feature can't not be emulated)

19h.4~0 **ADCHS:** ADC channel select

00000: ADC0 (PA0) 01000: ADC8 (PB1) others: Reserved

00001: ADC1 (PA1) 01001: ADC9 (PB2)

00010: ADC2 (PA2) 01010: ADC10 (PB4)

00011: ADC3 (PA3) 01011: ADC11 (PB5)

00100: ADC4 (PA4) 01100: ADC12 (PB6)

00101: ADC5 (PA5) 01101: ADC13 (PB7)

00110: ADC6 (PA6) 01110: VBG

00111: ADC7 (PB0) 10111: 1/4 VCC

193h	Bit 7	Bit 6	Bit 5	Bit 4	Bit 3	Bit 2	Bit 1	Bit 0
ADCDLYT	ADCDLYT							
R/W	R/W							
Reset	0	0	0	0	0	0	0	0

193h.7~0 **ADCDLYT:** The delay time between PWM period match and ADC start

8'h00: disable PWM trigger ADC start

8'h01~8'hFF: enable and delay time((ADCDLT[7:0]+2)/Fadc) to ADC start

6.7 Comparator

There is a Comparator (CMP) in this device.

The CMP built in a 7-bit DAC module, which output can be accessed to negative input port of the CMP.

Reference Voltage of DAC can be selected as V_{CC} or V_{BG} by setting SVRF (18Fh.7). V_{BG} will be configured as 1.20V or 2.56V by setting ADVREFS (19h.7~6). A suitable level of voltage can be selected for proper operation of user application by setting SVL (18Fh.6~0), which will change the resistance to transform the value of voltage. Setting the PDCMP=1 (18Dh.7) will let DAC and CMP enter power down mode. By configuring SCMPN (18Eh.7), negative port input source will be external pin input or DAC output. And positive port input source is external pin input. The SCIN (18Eh.6~4) and SCIP (18Eh.2~0) register determine negative and positive port external input source respectively.

Because the input module of the CMP is composed of PMOS, the input voltage range will be affected by Vth of the PMOS. Thus, the maximum input voltage of the CMP will be (V_{CC}-0.5) V. Meanwhile, the Comparator's hysteresis voltage is about 30mV.

The Comparator original output (CMPOX) can be read by CMPOX (18Dh.6) bit. The Chip provides a de-bounce module to de-bounce the CMPOX signal, user can select de-bounce time by CMPDBS (18Dh.1~0). The de-bounce output signal can select invert or not by CMPINV (18Dh.4) to generate CMPO signal. The CMPO can be output to pin (PA5) by set CMPOE (18Dh.5) and the PA5MOD should be set to xx10b.

The CMPO is also a trigger source for the interrupt trigger module to generate interrupt flag CMPIF (0Eh.4). The trigger mode is selected by CMPTRIG (18Dh.3~2). When Comparator power down, the interrupt flag will still be produced. Therefore, it is necessary to clear the interrupt flag first after turning on the CMP module each time to prevent using the dummy flag.

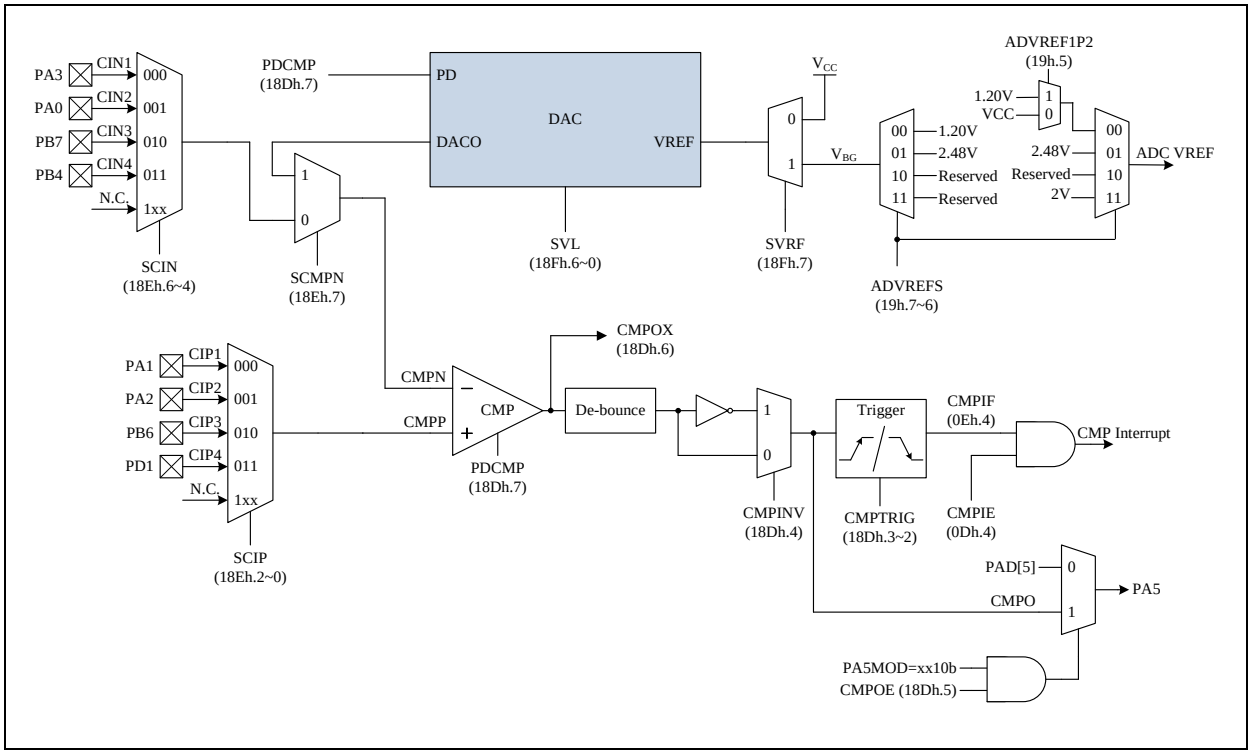

0Dh	Bit 7	Bit 6	Bit 5	Bit 4	Bit 3	Bit 2	Bit 1	Bit 0
INTIE1	–	PCIE	EEPIE	CMPIE	–	–	PWMIE	LVDIE
R/W	–	R/W	R/W	R/W	–	–	R/W	R/W
Reset	–	0	0	0	–	–	0	0

0Dh.4 **CMPIE:** Comparator interrupt enable
0: disable
1: enable

0Eh	Bit 7	Bit 6	Bit 5	Bit 4	Bit 3	Bit 2	Bit 1	Bit 0
INTIF1	–	PCIF	EEPIF	CMPIF	–	–	PWMIF	LVDIF
R/W	–	R/W	R/W	R/W	–	–	R/W	R/W
Reset	–	0	0	0	–	–	0	0

0Eh.4 **CMPIF:** Comparator interrupt event pending flag
This bit is set by H/W while CMPO match trigger condition, write EFh to INTIF1 will clear this flag

19h	Bit 7	Bit 6	Bit 5	Bit 4	Bit 3	Bit 2	Bit 1	Bit 0
ADCTL2	ADVREFS		ADVREF1P2	ADCHS				
R/W	R/W		R/W	R/W				
Reset	0	0	–	1	1	1	1	1

19h.7~6 **ADVREFS:** ADC reference voltage and V_{BG} output voltage select
00: ADC reference voltage is V_{CC} or 1.2V V_{BG} according to the value of ADVREF1P2. V_{BG} is 1.20V
01: ADC reference voltage is V_{BG}, V_{BG} is 2.56V
10: Reserved
11: ADC reference voltage is V_{BG}, V_{BG} is 2V(This feature can't not be emulated) (Don't use for the selection of DAC's VREF)

18Dh	Bit 7	Bit 6	Bit 5	Bit 4	Bit 3	Bit 2	Bit 1	Bit 0
CMPCTL	PDCMP	CMPOX	CMPOE	CMPINV	CMPTRIG		CMPDBS	
R/W	R/W	R	R/W	R/W	R/W		R/W	
Reset	1	1	0	0	0	0	0	0

18Dh.7 **PDCMP:** Comparator & DAC power down enable control
0: disable Comparator & DAC power down
1: enable Comparator & DAC power down

18Dh.6 **CMPOX:** Comparator original output (CMPOX) status
0: $V_{CMPP} < V_{CMPN}$
1: $V_{CMPP} > V_{CMPN}$ or PDCMP =1

18Dh.5 **CMPOE:** Comparator output (CMPO) signal output to PA5
0: disable
1: enable, PA5MOD should be set to xx10b

18Dh.4 **CMPINV:** Comparator de-bounce output invert select
0: no invert
1: invert

18Dh.3~2 **CMPTRIG:** Comparator interrupt trigger mode
00: Rising edge
01: Falling edge
10: Both edge
11: High level

18Dh.1~0 **CMPDBS:** Comparator original output (CMPOX) de-bounce time
00: none
01: 4 Fsys
10: 8 Fsys
11: 16 Fsys

18Eh	Bit 7	Bit 6	Bit 5	Bit 4	Bit 3	Bit 2	Bit 1	Bit 0
CMPPNS	SCMPN	SCIN			–	SCIP		
R/W	R/W	R/W			–	R/W		
Reset	1	1	1	1	–	1	1	1

18Eh.7 **SCMPN:** Comparator CMPN source select
0: Comparator CMPN source is external input (CINx)
1: Comparator CMPN source is DAC output

18Eh.6~4 **SCIN:** Comparator CMPN external input select
000: Comparator CMPN external input is CIN1 (PA3)
001: Comparator CMPN external input is CIN2 (PA0)
010: Comparator CMPN external input is CIN3 (PB7)
011: Comparator CMPN external input is CIN4 (PB4)
1xx: No connect

18Eh.2~0 **SCIP:** Comparator CMPP external input select
000: Comparator CMPP external input is CIP1 (PA1)
001: Comparator CMPP external input is CIP2 (PA2)
010: Comparator CMPP external input is CIP3 (PB6)
011: Comparator CMPP external input is CIP4 (PD1)
1xx: No connect

18Fh	Bit 7	Bit 6	Bit 5	Bit 4	Bit 3	Bit 2	Bit 1	Bit 0
DACTL	SVRF	SVL						
R/W	R/W	R/W						
Reset	0	0	0	0	0	0	0	0

18Fh.7 **SVRF:** DAC reference voltage select
0: V_{CC}
1: V_{BG} (voltage level is selected by ADVREFS)

18Fh.6~0 **SVL:** DAC output voltage select (reference source can be selected as V_{CC} or V_{BG})
000_0000: 0/128 * reference source
000_0001: 1/128 * reference source
…
111_1101: 125/128 * reference source
111_1110: 126/128 * reference source
111_1111: 127/128 * reference source

6.8 Cyclic Redundancy Check (CRC)

The chip supports an integrated 16-bit Cyclic Redundancy Check function. The Cyclic Redundancy Check (CRC) calculation unit is an error detection technique test algorithm and uses to verify data transmission or storage data correctness. The CRC calculation takes an 8-bit data stream or a block of data as input and generates a 16-bit output remainder. The data stream is calculated by the same generator polynomial.

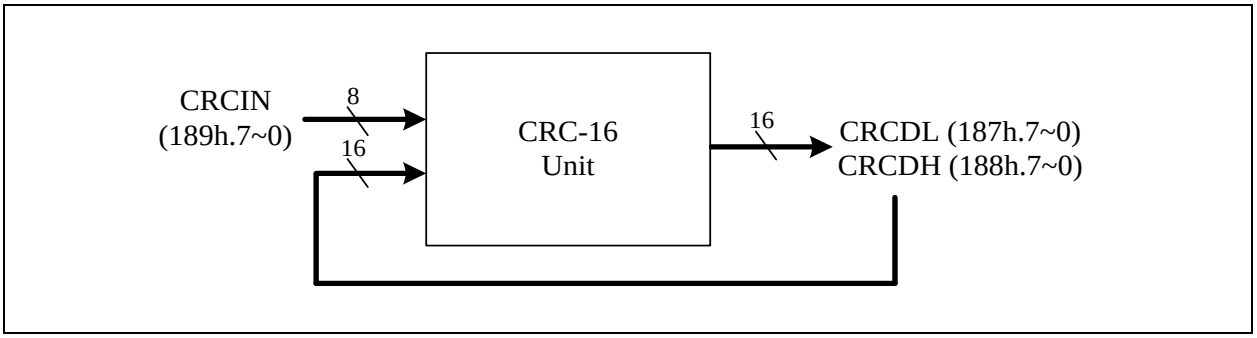

CRC16 Block Diagram

The CRC generator provides the 16-bit CRC result calculation based on the CRC-16-IBM polynomial. In this CRC generator, there is only one polynomial available for the numeric values calculation. It can't support the 16-bit CRC calculations based on any other polynomials. Each write operation to the CRCIN register creates a combination of the previous CRC value stored in the CRCDH and CRCDL registers. It will take one MCU instruction cycle to calculate.

CRC-16-IBM (Modbus) Polynomial representation: $\mathbf{X^{16} + X^{15} + X^{2} + 1}$

187h	Bit 7	Bit 6	Bit 5	Bit 4	Bit 3	Bit 2	Bit 1	Bit 0
CRCDL	CRCDL							
R/W	R/W							
Reset	1	1	1	1	1	1	1	1

187h.7~0 **CRCDL:** 16-bit CRC checksum data bit 7~0

188h	Bit 7	Bit 6	Bit 5	Bit 4	Bit 3	Bit 2	Bit 1	Bit 0
CRCDH	CRCDH							
R/W	R/W							
Reset	1	1	1	1	1	1	1	1

188h.7~0 **CRCDH:** 16-bit CRC checksum data bit 15~8

189h	Bit 7	Bit 6	Bit 5	Bit 4	Bit 3	Bit 2	Bit 1	Bit 0
CRCIN	CRCIN							
W	W							
Reset	–	–	–	–	–	–	–	–

189h.7~0 **CRCIN:** CRC data input, write this register to start CRC calculation

6.9 S/W Control LCD Driver

The chip support an S/W controlled method to driving LCD. All IO pins except PA7 could be the Common Pins. Common pins are capable of driving 1/2 bias by setting the register PAxMOD/PBxMOD/PDxMOD. The COM0 circuit is shown below.

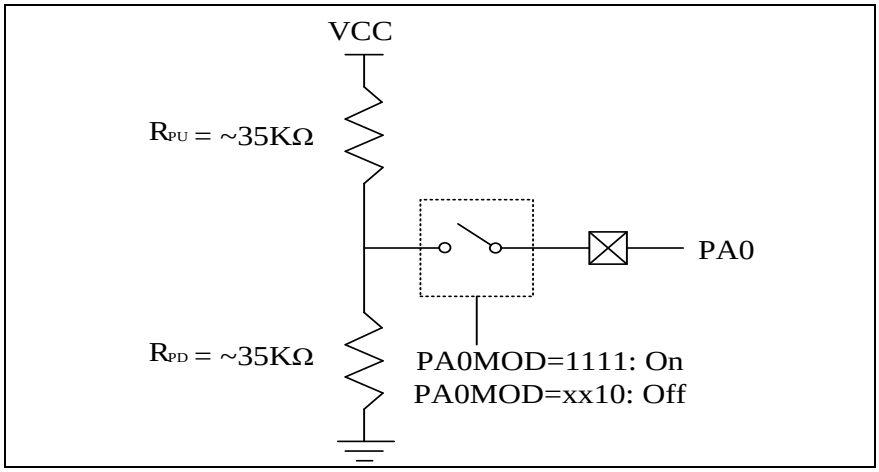

LCD COM0 Circuit

The frequency of any repeating waveform output on the COM pin can be used to represent the LCD frame rate. The figure below shows an LCD frame.

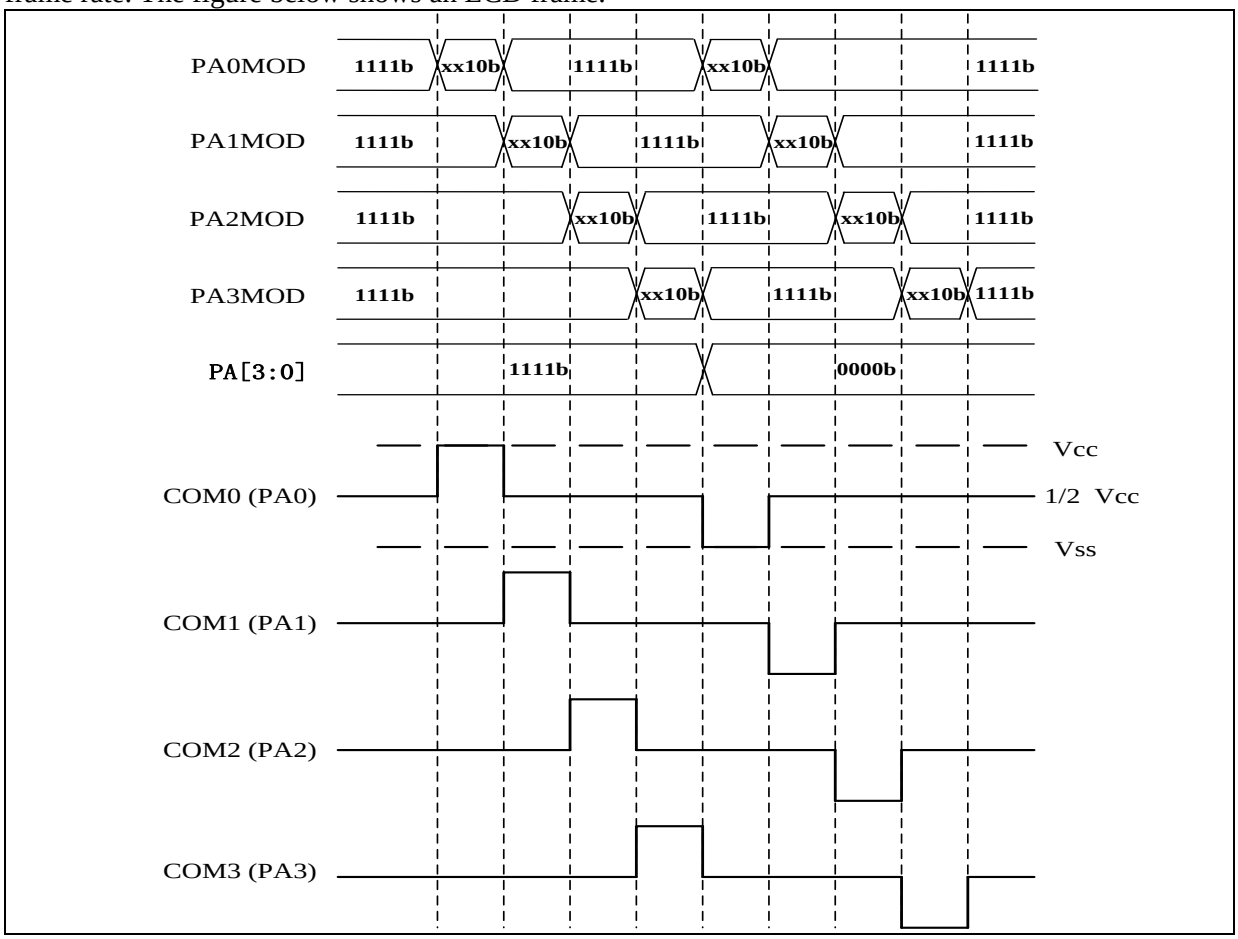

S/W Controlled LCD COM0 ~ COM3 Scanning

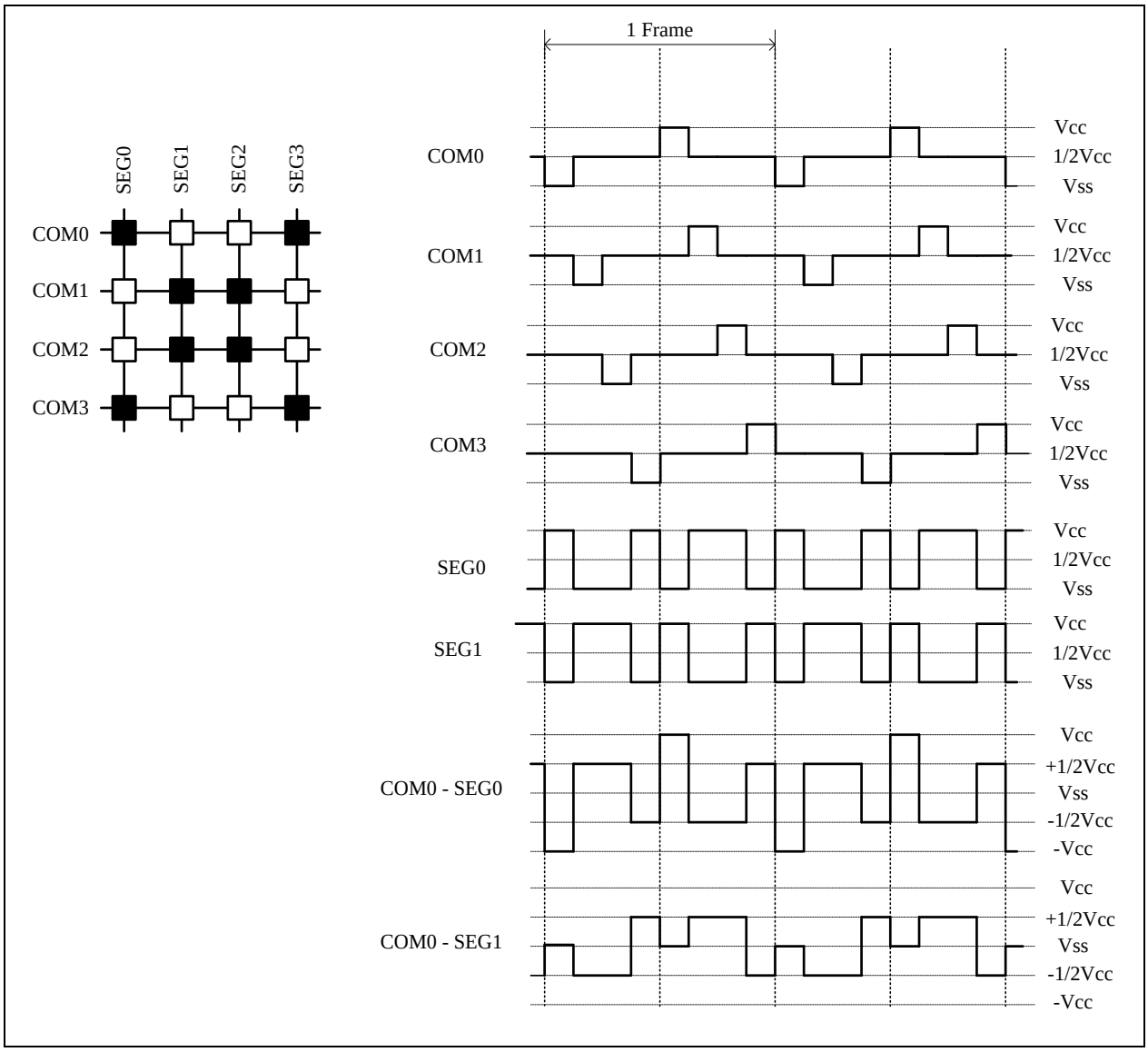

1/4 Duty, 1/2 Bias Output Waveform

MEMORY MAP

Name	Address	R/W	Rst	Description
INDF (00h/80h/100h/180h)				**Function related to: RAM W/R**
INDF	00.7~0	R/W	-	Not a physical register, addressing INDF actually point to the register whose address is contained in the FSR register
TM0 (01h/101h)				**Function related to: Timer0**
TM0	01.7~0	R/W	00	Timer0 content
PCL (02h/82h/102h/182h)				**Function related to: PROGRAM COUNT**
PCL	02.7~0	R/W	00	Programming Counter data bit 7~0
STATUS (03h/83h/103h/183h)				**Function related to: STATUS**
IRP	03.7	R/W	0	Register Bank Select bit (used for indirect addressing)
RP1	03.6	R/W	0	Register Bank Select bit 1 for direct addressing
RP0	03.5	R/W	0	Register Bank Select bit 0 for direct addressing
TO	03.4	R	0	WDT timeout flag, cleared by PWRST, 'SLEEP' or 'CLRWDT' instruction
PD	03.3	R	0	Power down flag, set by 'SLEEP', cleared by 'CLRWDT' instruction
Z	03.2	R/W	0	Zero flag
DC	03.1	R/W	0	Decimal Carry flag
C	03.0	R/W	0	Carry flag
FSR (04h/84h/104h/184h)				**Function related to: RAM W/R**
FSR	04.7~0	R/W	-	File Select Register, indirect address mode pointer
PAD (05h)				**Function related to: Port A**
PAD	05.7~0	R	-	Port A pin or "data register" state
		W	FF	Port A output data register
PBD (06h)				**Function related to: Port B**
PBD	06.7~0	R	-	Port B pin or "data register" state
		W	FF	Port B output data register
PDD (07h)				**Function related to: Port D**
PDD	07.1~0	R	-	Port D pin or "data register" state
		W	3	Port D output data register
PCLATH (0Ah/8Ah/10Ah/18Ah)				**Function related to: PROGRAM COUNT**
GPR	0A.7~4	R/W	0	General Purpose Register
PCLATH	0A.3~0	R/W	0	Write Buffer for the high byte of the Program Counter
INTIE (0Bh/8Bh/10Bh/18Bh)				**Function related to: Interrupt Enable**
ADCIE	0B.7	R/W	0	ADC interrupt enable 0: disable 1: enable
T2IE	0B.6	R/W	0	T2 interrupt enable 0: disable 1: enable
TM1IE	0B.5	R/W	0	Timer1 interrupt enable 0: disable 1: enable
TM0IE	0B.4	R/W	0	Timer0 interrupt enable 0: disable 1: enable
WKTIE	0B.3	R/W	0	Wake-up Timer interrupt enable and Wake-up Timer enable 0: disable 1: enable
INT2IE	0B.2	R/W	0	INT2 pin (PA7 or PB5) interrupt enable 0: disable 1: enable

Name	Address	R/W	Rst	Description
INT1IE	0B.1	R/W	0	INT1 pin (PA1 or PB1) interrupt enable 0: disable 1: enable
INT0IE	0B.0	R/W	0	INT0 pin (PA3 or PB2) interrupt enable 0: disable 1: enable
INTIF (0Ch)				**Function related to: Interrupt Flag**
ADCIF	0C.7	R	-	ADC interrupt flag, set by H/W after ADC end of conversion
		W	0	write 7Fh to INTIF will clear this flag
T2IF	0C.6	R	-	T2 interrupt event pending flag, set by H/W while T2 overflows
		W	0	write BFh to INTIF will clear this flag
TM1IF	0C.5	R	-	Timer1 interrupt event pending flag, set by H/W while Timer1 overflows
		W	0	write DFh to INTIF will clear this flag
TM0IF	0C.4	R	-	Timer0 interrupt event pending flag, set by H/W while Timer0 overflows
		W	0	write EFh to INTIF will clear this flag
WKTIF	0C.3	R	-	WKT interrupt event pending flag, set by H/W while WKT time out
		W	0	write F7h to INTIF will clear this flag
INT2IF	0C.2	R	-	INT2 (PA7 or PB5) interrupt event pending flag, set by H/W at INT2 pin's falling edge
		W	0	write FBh to INTIF will clear this flag
INT1IF	0C.1	R	-	INT1 (PA1 or PB1) interrupt event pending flag, set by H/W at INT1 pin's falling/rising edge
		W	0	write FDh to INTIF will clear this flag
INT0IF	0C.0	R	-	INT0 (PA3 or PB2) interrupt event pending flag, set by H/W at INT0 pin's falling/rising edge
		W	0	write FEh to INTIF will clear this flag
INTIE1 (0Dh)				**Function related to: Interrupt Enable**
PCIE	0D.6	R/W	0	All port pin-change wake-up interrupt enable 0: disable 1: enable
EEPIE	0D.5	R/W	0	EEPROM interrupt enable 0: disable 1: enable
CMPIE	0D.4	R/W	0	Comparator interrupt enable 0: disable 1: enable
PWMIE	0D.1	R/W	0	PWM interrupt enable 0: disable 1: enable
LVDIE	0D.0	R/W	0	LVD interrupt enable 0: disable 1: enable
INTIF1 (0Eh)				**Function related to: Interrupt Flag**
PCIF	0E.6	R	-	All port pin-change wake-up interrupt event pending flag, set by H/W at all pin's falling/rising edge. A sleep instruction is necessary before the event of pin-change otherwise pin-change event may be missed.
		W	0	write BFh to INTIF1 will clear this flag
EEPIF	0E.5	R	-	EEPROM interrupt event pending flag, set by H/W when EEPROM writing is finishing or time-out event occurred.
		W	0	write DFh to INTIF1 will clear this flag
CMPIF	0E.4	R	-	Comparator interrupt event pending flag, set by H/W while CMPO match trigger condition
		W	0	write EFh to INTIF1 will clear this flag

Name	Address	R/W	Rst	Description
PWMIF	0E.1	R	-	PWM interrupt event pending flag, set by H/W after PWM period counter roll over
		W	0	write FDh to INTIF1 will clear this flag
LVDIF	0E.0	R	-	LVD interrupt event pending flag, set by H/W while $V_{CC} < V_{LVD}$
		W	0	write FEh to INTIF1 will clear this flag
CLKCTL (0Fh)				**Function related to: Fsys**
SCKTYPE	0F.7	R/W	0	Slow Clock Type. This bit could only be changed in Fast mode (CPUCKS=1) 0: SIRC 1: SXT. PA4 and PA5 are crystal pins.
FCKTYPE	0F.6	R/W	0	Fast Clock Type. This bit could only be changed in Slow mode (CPUCKS=0) 0: FIRC 1: FXT. PA4 and PA5 are crystal pins. FXT oscillator gain is higher than that of SXT.
SLOWSTP	0F.4	R/W	0	Stop Slow-clock after execute SLEEP instruction 0: Slow-clock keeps running after execute SLEEP instruction 1: Slow-clock stop running after execute SLEEP instruction
FASTSTP	0F.3	R/W	1	Stop Fast-clock 0: Fast-clock is running 1: Fast-clock stops running
CPUCKS	0F.2	R/W	0	System clock source select 0: Slow-clock 1: Fast-clock
CPUPSC	0F.1~0	R/W	11	System clock source prescaler. System clock source 00: div 8 01: div 4 10: div 2 11: div 1
TM0RLD (10h)				**Function related to: Timer0**
TM0RLD	10.7~0	R/W	00	Timer0 reload data
TM0CTL (11h)				**Function related to: Timer0**
TM0STP	11.6	R/W	0	Stop Timer0 0: Timer0 runs 1: Timer0 stops
TM0EDG	11.5	R/W	0	TM0CKI (PA2) edge 0: rising edge 1: falling edge
TM0CKS	11.4	R/W	0	Timer0 prescaler clock source 0: Fsys/2 1: TM0CKI (PA2)
TM0PSC	11.3~0	R/W	0	Timer0 prescaler. Timer0 prescaler clock source divided by 0000: 1 0011: 8 0110: 64 0001: 2 0100: 16 0111: 128 0010: 4 0101: 32 1xxx: 256
TM1 (12h)				**Function related to: Timer1**
TM1	12.7~0	R/W	00	Timer1 content
TM1RLD (13h)				**Function related to: Timer1**
TM1RLD	13.7~0	R/W	00	Timer1 reload data
TM1CTL (14h)				**Function related to: Timer1**
TM1STP	14.6	R/W	0	Stop Timer1 0: Timer1 runs 1: Timer1 stops
TM1PSC	14.3~0	R/W	0	Timer1 prescaler. Timer1 clock source (Fsys/2) divided by 0000: 1 0011: 8 0110: 64 0001: 2 0100: 16 0111: 128 0010: 4 0101: 32 1xxx: 256
T2CTL (15h)				**Function related to: T2**

Name	Address	R/W	Rst	Description
T2CLR	15.4	R/W	0	Clear and stop T2 0: T2 runs 1: T2 clear and stops
T2CKS	15.3~2	R/W	0	T2 clock source selection 00: Slow-clock 11: Fsys/128 1x: FIRC/512 (16 MHz/512)
T2PSC	15.1~0	R/W	0	T2 prescaler. T2 clock source divided by 00: 32768 01: 16384 10: 8192 11: 128
LVCTL (16h)				**Function related to: LVD/LVR**
LVDF	16.7	R	0	Low voltage detection flag 0: $V_{CC} > V_{LVD}$ 1: $V_{CC} < V_{LVD}$
LVDHYS	16.6	R/W	0	LVD Hysteresis 0: disable 1: enable
LVRSAV	16.5	R/W	1	POR/LVR auto power off in STOP/IDLE mode
LVDSAV	16.4	R/W	1	LVD auto power off in STOP/IDLE mode
LVDS	16.3~0	R/W	0	LVD voltage (V_{LVD}) select Please refer to the table of LVD voltage in the section of "LVD Circuit Characteristics". (Left click the link to go to that page)
ADCDH (17h)				**Function related to: ADC**
ADCDH	17.7~0	R	-	ADC output data bit 11~4
ADCTL (18h)				**Function related to: ADC**
ADCDL	18.7~4	R	-	ADC output data bit 3~0
ADSTEOC	18.3	W	0	ADC start bit. 0: H/W clear after end of conversion 1: ADC start conversion Don't write ADSTEOC when PWM trigger ADC mode (i.e. ADCDLYT != 0) is utilized.
		R	0	ADC start or end of conversion bit. Normal mode(i.e. ADCDLYT = 0): ADC start 0: H/W clear after end of conversion 1: ADC start conversion PWM trigger ADC mode(i.e. ADCDLYT != 0): ADC end of conversion 0: ADC is in conversion 1: ADC is end of conversion
ADCKS	18.2~0	R/W	0	ADC clock frequency selection. 1MHz(Typ.) 000: Fsys/256 010: Fsys/64 100: Fsys/16 110: Fsys/4 001: Fsys/128 011: Fsys/32 101: Fsys/8 111: Fsys/2
ADCTL2 (19h)				**Function related to: ADC**
ADVREFS	19.7~6	R/W	00	ADC reference voltage and V_{BG} output voltage select 00: ADC reference voltage is V_{CC} or 1.2V V_{BG} according to the value of ADVREF1P2. V_{BG} is 1.20V 01: ADC reference voltage is V_{BG}, V_{BG} is 2.56V 10: Reserved 11: ADC reference voltage is V_{BG}, V_{BG} is 2.00V(This feature can't not be emulated) (Don't use for the selection of DAC's VREF)
ADVREF1P2	19.5	R/W	0	ADC 1.2V reference voltage select 0: ADC reference voltage is V_{CC} when ADVREFS=00. V_{BG} is 1.2V 1: ADC reference voltage is 1.2V V_{BG} when ADVREFS=00. V_{BG} is 1.2V(This feature can't not be emulated)

Name	Address	R/W	Rst	Description
ADCHS	19.4~0	R/W	1F	ADC channel select 00000: ADC0 (PA0) 01000: ADC8 (PB1) others: Reserved 00001: ADC1 (PA1) 01001: ADC9 (PB2) 00010: ADC2 (PA2) 01010: ADC10 (PB4) 00011: ADC3 (PA3) 01011: ADC11 (PB5) 00100: ADC4 (PA4) 01100: ADC12 (PB6) 00101: ADC5 (PA5) 01101: ADC13 (PB7) 00110: ADC6 (PA6) 01110: VBG 00111: ADC7 (PB0) 10111: 1/4 VCC
User Data Memory				
RAM	20~6F	R/W	-	RAM Bank0 area (80 Bytes)
RAM	70~7F	R/W	-	RAM common area (16 Bytes)
OPTION (81h/181h)				**Function related to: STATUS/INT0/INT1/WDT/WKT**
HWAUTO	81.7	R/W	0	Enter/Exit interrupt subroutine, HW auto Save/Restore WREG, FSR, TABR, PCLATH, DPL, DPH, and STATUS w/o TO, PD 0:disable 1: enable
INT0EDG	81.6	R/W	0	INT0 pin interrupt edge selection 0: falling edge to trigger 1: rising edge to trigger
INT1EDG	81.5	R/W	0	INT1 pin interrupt edge selection 0: falling edge to trigger 1: rising edge to trigger
WDTPSC	81.3~2	R/W	3	WDT period selections: 00: 125ms 01: 250ms 10: 1001ms 11: 2001ms @5V
WKTPSC	81.1~0	R/W	3	WKT period selections: 00: 15.6ms 01: 31.3ms 10: 62.5ms 11: 125ms @5V
PAMOD10 (85h)				**Function related to: Port A**
PA1MOD	85.7~4	R/W	1	PA1 I/O mode control
PA0MOD	85.3~0	R/W	1	PA0 I/O mode control
PAMOD32 (86h)				**Function related to: Port A**
PA3MOD	86.7~4	R/W	1	PA3 I/O mode control
PA2MOD	86.3~0	R/W	1	PA2 I/O mode control
PAMOD54 (87h)				**Function related to: Port A**
PA5MOD	87.7~4	R/W	1	PA5 I/O mode control
PA4MOD	87.3~0	R/W	1	PA4 I/O mode control
PAMOD76 (88h)				**Function related to: Port A**
PA7MOD	88.7~4	R/W	0	PA7 I/O mode control PA7 has no high-sink, 1/2 bias and resistor pull-down capability.
PA6MOD	88.3~0	R/W	1	PA6 I/O mode control
PWMCTL (89h)				**Function related to: PWM0**
PWMEN	89.7	R/W	0	PWM Clock Enable 0: Disable 1: Enable
CLRPWM	89.6	R/W	0	Clear PWM 0: not clear 1: clear
PWM0OM	89.5~4	R/W	0	PWM0 output mode 00: Mode0 01: Mode1 10: Mode2 11: Mode3

Name	Address	R/W	Rst	Description
PWM0DZ	89.3~0	R/W	0	PWM0 dead-zone(non-overlap) control 0000: no dead-zone(non-overlap) 0001: dead-zone(non-overlap) width are 1 PWM clock cycle 0010: dead-zone(non-overlap) width are 2 PWM clock cycles … 1111: dead-zone(non-overlap) width are 15 PWM clock cycles
PBMOD10 (8Ch)				**Function related to: Port B**
PB1MOD	8C.7~4	R/W	1	PB1 I/O mode control
PB0MOD	8C.3~0	R/W	1	PB0 I/O mode control
PBMOD32 (8Dh)				**Function related to: Port B**
PB3MOD	8D.7~4	R/W	1	PB3 I/O mode control
PB2MOD	8D.3~0	R/W	1	PB2 I/O mode control
PBMOD54 (8Eh)				**Function related to: Port B**
PB5MOD	8E.7~4	R/W	1	PB5 I/O mode control
PB4MOD	8E.3~0	R/W	1	PB4 I/O mode control
PBMOD76 (8Fh)				**Function related to: Port B**
PB7MOD	8F.7~4	R/W	1	PB7 I/O mode control
PB6MOD	8F.3~0	R/W	1	PB6 I/O mode control
PDMOD10 (90h)				**Function related to: Port D**
PD1MOD	90.7~4	R/W	1	PD1 I/O mode control
PD0MOD	90.3~0	R/W	1	PD0 I/O mode control
OPTION2 (91h)				**Function related to: PWM0/INT2/INT1/INT0**
PWMCKS	91.5~4	R/W	00	PWM Clock Source 00: Fsys 01: FIRC/256 10: FIRC (16 MHz) 11: FIRC*2 (32 MHz). Refer to the graph of minimal operating voltage for PWMCKS=FIRC x 2.
INT2SEL	91.2	R/W	0	INT2 pin select 0: PA7 1: PB5
INT1SEL	91.1	R/W	0	INT1 pin select 0: PA1 1: PB1
INT0SEL	91.0	R/W	0	INT0 pin select 0: PA3 1: PB2
PWMPRDH (92h)				**Function related to: PWM**
PWMPRDH	92.7~0	R/W	FF	PWM Period bit 15~8
PWMPRDL (93h)				**Function related to: PWM**
PWMPRDL	93.7~0	R/W	FF	PWM Period bit 7~0
PWM0DH (94h)				**Function related to: PWM0**
PWM0DH	94.7~0	R/W	80	PWM0 Duty bit 15~8
PWM0DL (95h)				**Function related to: PWM0**
PWM0DL	95.7~0	R/W	00	PWM0 Duty bit 7~0
PWM1DH (96h)				**Function related to: PWM1**
PWM1DH	96.7~0	R/W	80	PWM1 Duty bit 15~8
PWM1DL (97h)				**Function related to: PWM1**
PWM1DL	97.7~0	R/W	00	PWM1 Duty bit 7~0
PWM2DH (98h)				**Function related to: PWM2**
PWM2DH	98.7~0	R/W	80	PWM2 Duty bit 15~8

Name	Address	R/W	Rst	Description
PWM2DL (99h)				**Function related to: PWM2**
PWM2DL	99.7~0	R/W	00	PWM2 Duty bit 7~0
PWM3DH (9Ah)				**Function related to: PWM3**
PWM3DH	9A.7~0	R/W	80	PWM3 Duty bit 15~8
PWM3DL (9Bh)				**Function related to: PWM3**
PWM3DL	9B.7~0	R/W	00	PWM3 Duty bit 7~0
PWM4DH (9Ch)				**Function related to: PWM4**
PWM4DH	9C.7~0	R/W	80	PWM4 Duty bit 15~8
PWM4DL (9Dh)				**Function related to: PWM4**
PWM4DL	9D.7~0	R/W	00	PWM4 Duty bit 7~0
PWM5DH (9Eh)				**Function related to: PWM5**
PWM5DH	9E.7~0	R/W	80	PWM5 Duty bit 15~8
PWM5DL (9Fh)				**Function related to: PWM5**
PWM5DL	9F.7~0	R/W	00	PWM5 Duty bit 7~0
User Data Memory				
RAM	A0~EF	R/W	-	RAM Bank1 area (80 Bytes)
PINMOD (105h)				**Function related to: IO Port**
Reserved	105.5	R	x	read as unknown after reset
Reserved	105.4	R/W	0	must be kept at 0
HSINK	105.2	R/W	1	All IO port high sink current enable 0: low sink current 1: high sink current
Reserved	105.1	R/W	0	must be kept at 0
Reserved	105.0	R/W	0	must be kept at 0
PWMCTL2 (107h)				**Function related to: PWM0**
PWM0MOD	107.7	R/W	0	PWM0 mode select 0: Normal mode 1: Half-bridge mode
PWM0MSKE	107.6	R/W	0	PWM0 mask output enable 0: Disable 1: Enable, PWM0P/PWM0N output data by PWM0PMSK/PWM0NMSK while CLRPWM=1
PWM0NMSK	107.5	R/W	0	PWM0N mask data. If CLRPWM=1 and PMW0MSKE=1, PWM0N will output this mask data.
PWM0PMSK	107.4	R/W	0	PWM0P mask data. If CLRPWM=1 and PMW0MSKE=1, PWM0P will output this mask data.
LVRPD (109h)				**Function related to: LVR/POR**
LVRPD	109.7~0	W	0	Write 37h to force LVR+POR Disable Write 38h to force LVR Disable, POR still enable Write 39h to force POR Disable, LVR still enable Write others LVR and POR enable
PORPDF	109.1	R	0	POR force power down flag 0: POR enable 1: POR is forced power down
LVRPDF	109.0	R	0	LVR force power down flag 0: LVR enable 1: LVR is forced power down
PCH (10Ch)				**Function related to: PCH**

Name	Address	R/W	Rst	Description
PCH	10C.7~0	W	00	Programming Counter high byte source selection when instruction with PCL as destination is executed write 0x1C to set PCH_S = 1: PCH keep the original value write others to clear PCH_S = 0: PCH is from PCLATH After reset, the PCH_S is cleared
PCH	10C.3~0	R	0	Program Counter data bit 11~8
BGTRIM (10Eh)				**Function related to: Bandgap**
BGTRIM	10E.4~0	R/W	CFG	VBG trim value
IRCF (10Fh)				**Function related to: Internal RC**
IRCF	10F.6~0	R/W	CFG	FIRC trim value
BG2TRIM (111h)				**Function related to: Bandgap**
BG2TRIM	111.7~0	R	CFG	VBG 2V trim value. The users could move this register to BGTRIM for exact 2V VBG. This feature can't be emulated.
RDCTL (113h)				**Function related to: Program ROM**
RDCTL	113.1~0	R/W	02	Read signal delay control for Program ROM 00: 16ns delay for read signal of Program ROM 01: 12ns delay for read signal of Program ROM 10: 8ns delay for read signal of Program ROM 11: 4ns delay for read signal of Program ROM Change this register at slow clock for safety. **The user must switch this register to "4ns" to enhance the performance of minimal operating voltage.** This feature can't be emulated.
SIRCF (115h)				**Function related to: Slow Internal RC**
SIRCF	115.4~0	R/W	CFG	SIRC trim value
User Data Memory				
RAM	120~16F	R/W	-	RAM Bank2 area (80 Bytes)
DPL (185h)				**Function related to: Table Read**
DPL	185.7~0	R/W	00	TBL Data Pointer bit 7~0
DPH (186h)				**Function related to: Table Read**
DPH	186.3~0	R/W	00	TBL Data Pointer bit 11~8
CRCDL (187h)				**Function related to: CRC16**
CRCDL	187.7~0	R/W	FF	16-bit CRC checksum data bit 7~0
CRCDH (188h)				**Function related to: CRC16**
CRCDH	188.7~0	R/W	FF	16-bit CRC checksum data bit 15~8
CRCIN (189h)				**Function related to: CRC16**
CRCIN	189.7~0	W	0	CRC data input, write this register to start CRC calculation
TABR (18Ch)				**Function related to: Table Read**

Name	Address	R/W	Rst	Description
TABR	18C.7~0	R/W	0	1. TABR write 01h = instruction TABRL (Read PROM low byte data to W and TABR) 2. TABR write 02h = instruction TABRH (Read PROM high byte data to W and TABR) 3. Don't write the value other than 01h or 02h into register TABR 4. After step.1 or step.2, read TABR to get main ROM table read value for C language *Table Read for ASM: Support instruction TABRL / TABRH or register TABR. Suggest not using the method of register TABR. SFR HWAUTO=1 is also suggested.* *Table Read for C: using register TABR. Only be used outside or inside the interrupt service routine. Don't utilize it inside and outside interrupt service routine simultaneously. Otherwise, something will be wrong.*
CMPCTL (18Dh)				**Function related to: Comparator**
PDCMP	18D.7	R/W	1	Comparator & DAC power down enable control 0: disable Comparator & DAC power down 1: enable Comparator & DAC power down
CMPOX	18D.6	R	1	Comparator original output (CMPOX) status 0: $V_{CMPP} < V_{CMPN}$ 1: $V_{CMPP} > V_{CMPN}$ or PDCMP =1
CMPOE	18D.5	R/W	0	Comparator output (CMPO) signal output to PA5 0: disable 1: enable, PA5MOD should be set to xx10b
CMPINV	18D.4	R/W	0	Comparator de-bounce output invert select 0: no invert 1: invert
CMPTRIG	18D.3~2	R/W	0	Comparator interrupt trigger mode 00: Rising edge 01: Falling edge 10: Both edge 11: High level
CMPDBS	18D.1~0	R/W	0	Comparator original output (CMPOX) de-bounce time 00: none 01: 4 Fsys 10: 8 Fsys 11: 16 Fsys
CMPPNS (18Eh)				**Function related to: Comparator/DAC**
SCMPN	18E.7	R/W	1	Comparator CMPN source select 0: Comparator CMPN source is external input (CINx) 1: Comparator CMPN source is DAC output
SCIN	18E.6~4	R/W	7	Comparator CMPN external input select 000: Comparator CMPN external input is CIN1 (PA3) 001: Comparator CMPN external input is CIN2 (PA0) 010: Comparator CMPN external input is CIN3 (PB7) 011: Comparator CMPN external input is CIN4 (PB4) 1xx: No connect
-	18E.3	-	-	This bit must be set as 1 in emulation
SCIP	18E.2~0	R/W	7	Comparator CMPP external input select 000: Comparator CMPP external input is CIP1 (PA1) 001: Comparator CMPP external input is CIP2 (PA2) 010: Comparator CMPP external input is CIP3 (PB6) 011: Comparator CMPP external input is CIP4 (PD1) 1xx: No connect

Name	Address	R/W	Rst	Description
DACTL (18Fh)				**Function related to: DAC/Comparator**
SVRF	18F.7	R/W	0	DAC reference voltage select 0: V_{CC} 1: V_{BG} (voltage level is selected by ADVREFS)
SVL	18F.6~0	R/W	0	DAC output voltage select (reference source can be selected as V_{CC} or V_{BG}) 000_0000: 0/128 * reference source 000_0001: 1/128 * reference source … 111_1101: 125/128 * reference source 111_1110: 126/128 * reference source 111_1111: 127/128 * reference source
EEPCTL (190h)				**Function related to: EEPROM**
EEPTO	190.7	R	0	EEPROM Write Time-Out flag 0: EEPROM Write no Time-Out 1: EEPROM Write is Time-Out. EEPTO will be cleared when EEPEN is disabled.
EEPTE	190.1~0	R/W	0	EEPROM Write Time-Out enable (Access wait time) 00: Disable 01: 2 ms@5.0V, 2.5 ms@3.0V 10: 7.8 ms@5.0V, 10 ms@3.0V 11: 62.5 ms@5.0V, 79.6 ms@3.0V
EEPEN (191h)				**Function related to: EEPROM**
EEPEN	191.7~0	W	0	EEPROM Access Enable Write 0xE2 to this register will enable EEPROM access Write others value to this register will disable EEPROM access
EEPDT (192h)				**Function related to: EEPROM**
EEPDT	192.7~0	W	0	EEPROM Data to write Write data to this register will let H/W write the data to EEPROM when EEPROM access is enable **note: To clear watchdog first before writing EEPROM to avoid watchdog timer reset during writing procedure for safety.**
ADCDLYT (193h)				**Function related to: ADC**
ADCDLYT	193.7~0	R/W	0	The delay time between PWM period match and ADC start 8'h00: disable PWM trigger ADC start 8'h01~8'hFF: enable and delay time(ADCDLT[7:0]/Fadc) to ADC start

INSTRUCTION SET

Each instruction is a 16-bit word divided into an Op Code, which specifies the instruction type, and one or more operands, which further specify the operation of the instruction. The instructions can be categorized as byte-oriented, bit-oriented and literal operations list in the following table.

For byte-oriented instructions, “f” represents the address designator and “d” represents the destination designator. The address designator is used to specify which address in Program memory is to be used by the instruction. The destination designator specifies where the result of the operation is to be placed. If “d” is “0”, the result is placed in the W register. If “d” is “1”, the result is placed in the address specified in the instruction.

For bit-oriented instructions, “b” represents a bit field designator, which selects the number of the bit affected by the operation, while “f” represents the address designator. For literal operations, “k” represents the literal or constant value.

Field/Legend	Description
f	Register File Address
b	Bit address
k	Literal. Constant data or label
d	Destination selection field, 0: Working register, 1: Register file
W	Working Register
Z	Zero Flag
C	Carry Flag or /Borrow Flag
DC	Decimal Carry Flag or Decimal /Borrow Flag
PC	Program Counter
TOS	Top Of Stack
GIE	Global Interrupt Enable Flag (i-Flag)
[]	Option Field
( )	Contents
.	Bit Field
B	Before
A	After
←	Assign direction

Mnemonic		Op Code	Cycle	Flag Affect	Description
Byte-Oriented File Register Instruction					
ADDWX	f, d	ff00 0111 dfff ffff	1	C, DC, Z	Add W and "f"
ANDWX	f, d	ff00 0101 dfff ffff	1	Z	AND W with "f"
CLRX	f	ff00 0001 1fff ffff	1	Z	Clear "f"
CLRW		0000 0001 0100 0000	1	Z	Clear W
COMX	f, d	ff00 1001 dfff ffff	1	Z	Complement "f"
DECX	f, d	ff00 0011 dfff ffff	1	Z	Decrement "f"
DECXSZ	f, d	ff00 1011 dfff ffff	1 or 2	-	Decrement "f", skip if zero
INCX	f, d	ff00 1010 dfff ffff	1	Z	Increment "f"
INCXSZ	f, d	ff00 1111 dfff ffff	1 or 2	-	Increment "f", skip if zero
IORWX	f, d	ff00 0100 dfff ffff	1	Z	OR W with "f"
MOVX	f,d	ff00 1000 dfff ffff	1	Z	Move "f"
MOVXW	f	ff00 1000 0fff ffff	1	Z	Move "f" to W
MOVWX	f	ff00 0000 1fff ffff	1	-	Move W to "f"
RLX	f, d	ff00 1101 dfff ffff	1	C	Rotate left "f" through carry
RRX	f, d	ff00 1100 dfff ffff	1	C	Rotate right "f" through carry
SUBWX	f, d	ff00 0010 dfff ffff	1	C, DC, Z	Subtract W from "f"
SWAPX	f, d	ff00 1110 dfff ffff	1	-	Swap nibbles in "f"
TSTX	f	ff00 1000 1fff ffff	1	Z	Test if "f" is zero
XORWX	f, d	ff00 0110 dfff ffff	1	Z	XOR W with "f"
Bit-Oriented File Register Instruction					
BCX	f, b	ff11 00bb bfff ffff	1	-	Clear "b" bit of "f"
BSX	f, b	ff11 01bb bfff ffff	1	-	Set "b" bit of "f"
BTXSC	f, b	ff11 10bb bfff ffff	1 or 2	-	Test "b" bit of "f", skip if clear
BTXSS	f, b	ff11 11bb bfff ffff	1 or 2	-	Test "b" bit of "f", skip if set
Literal and Control Instruction					
ADDLW	k	0001 1100 kkkk kkkk	1	C, DC, Z	Add Literal "k" and W
ANDLW	k	0001 1011 kkkk kkkk	1	Z	AND Literal "k" with W
LCALL	k	kk10 0kkk kkkk kkkk	2	-	Call subroutine "k"
CLRWDT		0001 1110 0000 0100	1	TO, PD	Clear Watch Dog Timer
LGOTO	k	kk10 1kkk kkkk kkkk	2	-	Jump to branch "k"
IORLW	k	0001 1010 kkkk kkkk	1	Z	OR Literal "k" with W
MOVLW	k	0001 1001 kkkk kkkK	1	-	Move Literal "k" to W
NOP		0000 0000 0000 0000	1	-	No operation
RET		0000 0000 0100 0000	2	-	Return from subroutine
RETI		0000 0000 0110 0000	2	-	Return from interrupt
RETLW	k	0001 1000 kkkk kkkk	2	-	Return with Literal in W
SLEEP		0001 1110 0000 0011	1	TO, PD	Go into Power-down mode, Clock oscillation stops
SUBLW	k	0001 1111 kkkk kkkk	1	C, DC, Z	Subtract W from literal
TABRH		0000 0000 0101 1000	2	-	Lookup ROM high data to W
TABRL		0000 0000 0101 0000	2	-	Lookup ROM low data to W
XORLW	k	0001 1101 kkkk kkkk	1	Z	XOR Literal "k" with W

ADDLW	**Add Literal "k" and W**	
Syntax	ADDLW k	
Operands	k : 00h ~ FFh	
Operation	(W) ← (W) + k	
Status Affected	C, DC, Z	
OP-Code	0001 1100 kkkk kkkk	
Description	The contents of the W register are added to the eight-bit literal 'k' and the result is placed in the W register.	
Cycle	1	
Example	ADDLW 0x15	B : W =0x10 A : W =0x25

ADDWX	**Add W and "f"**	
Syntax	ADDWX f [,d]	
Operands	f : 000h ~ 1FFh, d : 0, 1	
Operation	(destination) ← (W) + (f)	
Status Affected	C, DC, Z	
OP-Code	ff00 0111 dfff ffff	
Description	Add the contents of the W register with register 'f'. If 'd' is 0, the result is stored in the W register. If 'd' is 1, the result is stored back in register 'f'.	
Cycle	1	
Example	ADDWX FSR, 0	B : W =0x17, FSR =0xC2 A : W =0xD9, FSR =0xC2

ANDLW	**Logical AND Literal "k" with W**	
Syntax	ANDLW k	
Operands	k : 00h ~ FFh	
Operation	(W) ← (W) AND k	
Status Affected	Z	
OP-Code	0001 1011 kkkk kkkk	
Description	The contents of W register are AND'ed with the eight-bit literal 'k'. The result is placed in the W register.	
Cycle	1	
Example	ANDLW 0x5F	B : W =0xA3 A : W =0x03

ANDWX	**AND W with "f"**	
Syntax	ANDWX f [,d]	
Operands	f : 000h ~ 1FFh, d : 0, 1	
Operation	(destination) ← (W) AND (f)	
Status Affected	Z	
OP-Code	ff00 0101 dfff ffff	
Description	AND the W register with register 'f'. If 'd' is 0, the result is stored in the W register. If 'd' is 1, the result is stored back in register 'f'.	
Cycle	1	
Example	ANDWX FSR, 1	B : W =0x17, FSR =0xC2 A : W =0x17, FSR =0x02

BCX	**Clear "b" bit of "f"**	
Syntax	BCX f [,b]	
Operands	f : 000h ~ 1FFh, b : 0 ~ 7	
Operation	(f.b) ← 0	
Status Affected	-	
OP-Code	ff11 00bb bfff ffff	
Description	Bit 'b' in register 'f' is cleared.	
Cycle	1	
Example	BCX FLAG_REG, 7	B : FLAG_REG =0xC7 A : FLAG_REG =0x47

BSX	**Set "b" bit of "f"**	
Syntax	BSX f [,b]	
Operands	f : 000h ~ 1FFh, b : 0 ~ 7	
Operation	(f.b) ← 1	
Status Affected	-	
OP-Code	ff11 01bb bfff ffff	
Description	Bit 'b' in register 'f' is set.	
Cycle	1	
Example	BSX FLAG_REG, 7	B : FLAG_REG =0x0A A : FLAG_REG =0x8A

BTXSC	**Test "b" bit of "f", skip if clear(0)**	
Syntax	BTXSC f [,b]	
Operands	f : 000h ~ 1FFh, b : 0 ~ 7	
Operation	Skip next instruction if (f.b) =0	
Status Affected	-	
OP-Code	ff11 10bb bfff ffff	
Description	If bit 'b' in register 'f' is 1, then the next instruction is executed. If bit 'b' in register 'f' is 0, then the next instruction is discarded, and a NOP is executed instead, making this a 2nd cycle instruction.	
Cycle	1 or 2	
Example	LABEL1: BTXSC FLAG, 1 TRUE: LGOTO SUB1 FALSE: ...	B : PC =LABEL1 A : if FLAG.1 =0, PC =FALSE if FLAG.1 =1, PC =TRUE

BTXSS	**Test "b" bit of "f", skip if set(1)**	
Syntax	BTXSS f [,b]	
Operands	f : 000h ~ 1FFh, b : 0 ~ 7	
Operation	Skip next instruction if (f.b) =1	
Status Affected	-	
OP-Code	ff11 11bb bfff ffff	
Description	If bit 'b' in register 'f' is 0, then the next instruction is executed. If bit 'b' in register 'f' is 1, then the next instruction is discarded, and a NOP is executed instead, making this a 2nd cycle instruction.	
Cycle	1 or 2	
Example	LABEL1: BTXSS FLAG, 1 TRUE: LGOTO SUB1 FALSE: ...	B : PC =LABEL1 A : if FLAG.1 =0, PC =TRUE if FLAG.1 =1, PC =FALSE

CLRX	**Clear "f"**	
Syntax	CLRX f	
Operands	f : 000h ~ 1FFh	
Operation	(f) ← 00h, Z ← 1	
Status Affected	Z	
OP-Code	ff00 0001 1fff ffff	
Description	The contents of register 'f' are cleared and the Z bit is set.	
Cycle	1	
Example	CLRX FLAG_REG	B : FLAG_REG =0x5A A : FLAG_REG =0x00, Z =1

CLRW	**Clear W**	
Syntax	CLRW	
Operands	-	
Operation	(W) ← 00h, Z ← 1	
Status Affected	Z	
OP-Code	0000 0001 0100 0000	
Description	W register is cleared and Z bit is set.	
Cycle	1	
Example	CLRW	B : W =0x5A A : W =0x00, Z =1

CLRWDT	**Clear Watchdog Timer**	
Syntax	CLRWDT	
Operands	-	
Operation	WDT Timer ← 00h	
Status Affected	TO, PD	
OP-Code	0001 1110 0000 0100	
Description	CLRWDT instruction clears the Watchdog Timer	
Cycle	1	
Example	CLRWDT	B : WDT counter =? A : WDT counter =0x00

COMX	**Complement "f"**	
Syntax	COMX f [,d]	
Operands	f : 000h ~ 1FFh, d : 0, 1	
Operation	(destination) ← ($\bar{f}$)	
Status Affected	Z	
OP-Code	ff00 1001 dfff ffff	
Description	The contents of register 'f' are complemented. If 'd' is 0, the result is stored in W. If 'd' is 1, the result is stored back in register 'f'.	
Cycle	1	
Example	COMX REG1, 0	B : REG1 =0x13 A : REG1 =0x13, W =0xEC

DECX	**Decrement "f"**
Syntax	DECX f [,d]
Operands	f : 000h ~ 1FFh, d : 0, 1
Operation	(destination) ← (f) - 1
Status Affected	Z
OP-Code	ff00 0011 dfff ffff
Description	Decrement register 'f'. If 'd' is 0, the result is stored in the W register. If 'd' is 1, the result is stored back in register 'f'.
Cycle	1
Example	DECX CNT, 1 B : CNT =0x01, Z =0 A : CNT =0x00, Z =1

DECXSZ	**Decrement "f", Skip if 0**
Syntax	DECXSZ f [,d]
Operands	f : 000h ~ 1FFh, d : 0, 1
Operation	(destination) ← (f) - 1, skip next instruction if result is 0
Status Affected	-
OP-Code	ff00 1011 dfff ffff
Description	The contents of register 'f' are decremented. If 'd' is 0, the result is placed in the W register. If 'd' is 1, the result is placed back in register 'f'. If the result is 1, the next instruction is executed. If the result is 0, then a NOP is executed instead, making it a 2 cycle instruction.
Cycle	1 or 2
Example	LABEL1: DECXSZ CNT, 1 B : PC =LABEL1 LGOTO LOOP A : CNT =CNT – 1 CONTINUE: if CNT =0, "LGOTO LOOP" is replace with NOP if CNT ≠0, "LGOTO LOOP" will be executed

INCX	**Increment "f"**
Syntax	INCX f [,d]
Operands	f : 000h ~ 1FFh
Operation	(destination) ← (f) + 1
Status Affected	Z
OP-Code	ff00 1010 dfff ffff
Description	The contents of register 'f' are incremented. If 'd' is 0, the result is placed in the W register. If 'd' is 1, the result is placed back in register 'f'.
Cycle	1
Example	INCX CNT, 1 B : CNT =0xFF, Z =0 A : CNT =0x00, Z =1

INCXSZ	**Increment "f", Skip if 0**
Syntax	INCXSZ f [,d]
Operands	f : 000h ~ 1FFh, d : 0, 1
Operation	(destination) ← (f) + 1, skip next instruction if result is 0
Status Affected	-
OP-Code	ff00 1111 dfff ffff
Description	The contents of register 'f' are incremented. If 'd' is 0, the result is placed in the W register. If 'd' is 1, the result is placed back in register 'f'. If the result is 1, the next instruction is executed. If the result is 0, a NOP is executed instead, making it a 2 cycle instruction.
Cycle	1 or 2
Example	LABEL1: INCXSZ CNT, 1 B : PC =LABEL1 LGOTO LOOP A : CNT =CNT + 1 CONTINUE: if CNT =0, "LGOTO LOOP" is replace with NOP if CNT ≠0, "LGOTO LOOP" will be executed

IORLW	**Inclusive OR Literal with W**
Syntax	IORLW k
Operands	k : 00h ~ FFh
Operation	(W) ← (W) OR k
Status Affected	Z
OP-Code	0001 1010 kkkk kkkk
Description	The contents of the W register are OR'ed with the eight-bit literal 'k'. The result is placed in the W register.
Cycle	1
Example	IORLW 0x35 B : W =0x9A A : W =0xBF, Z =0

IORWX	**Inclusive OR W with "f"**
Syntax	IORWX f [,d]
Operands	f : 000h ~ 1FFh, d : 0, 1
Operation	(destination) ← (W) OR (f)
Status Affected	Z
OP-Code	ff00 0100 dfff ffff
Description	Inclusive OR the W register with register 'f'. If 'd' is 0, the result is placed in the W register. If 'd' is 1, the result is placed back in register 'f'.
Cycle	1
Example	IORWX RESULT, 0 B : RESULT =0x13, W =0x91 A : RESULT =0x13, W =0x93, Z =0

LCALL	Call subroutine "k"	
Syntax	LCALL k	
Operands	k : 0000h ~ 1FFFh	
Operation	Operation: TOS ← (PC) + 1, PC.12~0 ← k	
Status Affected	-	
OP-Code	kk10 0kkk kkkk kkkk	
Description	LCALL Subroutine. First, return address (PC+1) is pushed onto the stack. The 13-bit immediate address is loaded into PC bits <12:0>. LCALL is a two-cycle instruction.	
Cycle	2	
Example	LABEL1 LCALL SUB1	B : PC =LABEL1 A : PC =SUB1, TOS =LABEL1 + 1

LGOTO	Unconditional Branch	
Syntax	LGOTO k	
Operands	k : 0000h ~ 1FFFh	
Operation	PC.12~0 ← k	
Status Affected	-	
OP-Code	kk10 1kkk kkkk kkkk	
Description	LGOTO is an unconditional branch. The 13-bit immediate value is loaded into PC bits <12:0>. LGOTO is a two-cycle instruction.	
Cycle	2	
Example	LABEL1 LGOTO SUB1	B : PC =LABEL1 A : PC =SUB1

MOVX	Move f	
Syntax	MOVX f [,d]	
Operands	f : 000h ~ 1FFh, d : 0, 1	
Operation	(destination) ← (f)	
Status Affected	Z	
OP-Code	ff00 1000 dfff ffff	
Description	The contents of register 'f' are moved to a destination dependent upon the status of d. If d=0, destination is W register. If d=1, the destination is file register f itself. d=1 is useful to test a file register, since status flag Z is affected.	
Cycle	1	
Example	MOVX FSR,0	B : FSR =0xC2, W =? A : FSR =0xC2, W =0xC2

MOVXW	Move "f" to W	
Syntax	MOVXW f	
Operands	f : 000h ~ 1FFh	
Operation	(W) ← (f)	
Status Affected	Z	
OP-Code	ff00 1000 0fff ffff	
Description	The contents of register 'f' are moved to W register.	
Cycle	1	
Example	MOVXW FSR	B : FSR =0xC2, W =? A : FSR =0xC2, W =0xC2

MOVLW	Move Literal to W	
Syntax	MOVLW k	
Operands	k : 00h ~ FFh	
Operation	(W) ← k	
Status Affected	-	
OP-Code	0001 1001 kkkk kkkk	
Description	The eight-bit literal 'k' is loaded into W register. The don't cares will assemble as 0's.	
Cycle	1	
Example	MOVLW 0x5A	B : W =? A : W =0x5A

MOVWX	Move W to "f"	
Syntax	MOVWX f	
Operands	f : 000h ~ 1FFh	
Operation	(f) ← (W)	
Status Affected	-	
OP-Code	ff00 0000 1fff ffff	
Description	Move data from W register to register 'f'.	
Cycle	1	
Example	MOVWX REG1	B : REG1 =0xFF, W =0x4F A : REG1 =0x4F, W =0x4F

NOP	No Operation	
Syntax	NOP	
Operands	-	
Operation	No Operation	
Status Affected	-	
OP-Code	0000 0000 0000 0000	
Description	No Operation	
Cycle	1	
Example	NOP	-

RET	Return from Subroutine	
Syntax	RET	
Operands	-	
Operation	PC ← TOS	
Status Affected	-	
OP-Code	0000 0000 0100 0000	
Description	Return from subroutine. The stack is POPed and the top of the stack (TOS) is loaded into the program counter. This is a two-cycle instruction.	
Cycle	2	
Example	RET	A : PC =TOS

RETI	**Return from Interrupt**
Syntax	RETI
Operands	-
Operation	PC ← TOS, GIE ← 1
Status Affected	-
OP-Code	0000 0000 0110 0000
Description	Return from Interrupt. Stack is POPed and Top-of-Stack (TOS) is loaded in to the PC. Interrupts are enabled. This is a two-cycle instruction.
Cycle	2
Example	RETI A : PC =TOS, GIE =1

RETLW	**Return with Literal in W**
Syntax	RETLW k
Operands	k : 00h ~ FFh
Operation	PC ← TOS, (W) ← k
Status Affected	-
OP-Code	0001 1000 kkkk kkkk
Description	The W register is loaded with the eight-bit literal 'k'. The program counter is loaded from the top of the stack (the return address). This is a two-cycle instruction.
Cycle	2
Example	LCALL TABLE B : W =0x07 : A : W =value of k8 TABLE ADDWX PCL, 1 RETLW k1 RETLW k2 : RETLW kn

RLX	**Rotate Left "f" through Carry**
Syntax	RLX f [,d]
Operands	f : 000h ~ 1FFh, d : 0, 1
Operation	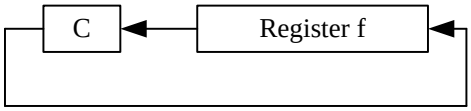
Status Affected	C
OP-Code	ff00 1101 dfff ffff
Description	The contents of register 'f' are rotated one bit to the left through the Carry Flag. If 'd' is 0, the result is placed in the W register. If 'd' is 1, the result is stored back in register 'f'.
Cycle	1
Example	RLX REG1, 0 B : REG1 =1110 0110, C =0 A : REG1 =1110 0110 W =1100 1100, C =1

RRX	**Rotate Right "f" through Carry**
Syntax	RRX f [,d]
Operands	f : 000h ~ 1FFh, d : 0, 1
Operation	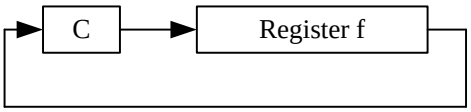
Status Affected	C
OP-Code	ff00 1100 dfff ffff
Description	The contents of register 'f' are rotated one bit to the right through the Carry Flag. If 'd' is 0, the result is placed in the W register. If 'd' is 1, the result is placed back in register 'f'.
Cycle	1
Example	RRX REG1, 0 — B : REG1 =1110 0110, C =0 A : REG1 =1110 0110 W =0111 0011, C =0

SLEEP	**Go into Power-down mode, Clock oscillation stops**
Syntax	SLEEP
Operands	-
Operation	-
Status Affected	TO, PD
OP-Code	001 1110 0000 0011
Description	Go into Power-down mode with the oscillator stops.
Cycle	1
Example	SLEEP — -

SUBLW	**Subtract W from Literal**
Syntax	SUBLW k
Operands	k : 00h ~ FFh
Operation	(W) ← k - (W)
Status Affected	C, DC, Z
OP-Code	0001 1111 kkkk kkkk
Description	The W register is subtracted (2's complement method) from the eight-bit literal "k". The result is placed in the W register.
Cycle	1
Example	SUBLW 0x15 — B : W =0x25 A : W =0xF0

SUBWX	**Subtract W from "f"**
Syntax	SUBWX f [,d]
Operands	f : 000h ~ 1FFh, d : 0, 1
Operation	(destination) ← (f) – (W)
Status Affected	C, DC, Z
OP-Code	ff00 0010 dfff ffff
Description	Subtract (2's complement method) W register from register 'f'. If 'd' is 0, the result is stored in the W register. If 'd' is 1, the result is stored back in register 'f'.
Cycle	1
Example	SUBWX REG1, 1 — B : REG1 =0x03, W =0x02, C =?, Z =? A : REG1 =0x01, W =0x02, C =1, Z =0 SUBWX REG1, 1 — B : REG1 =0x02, W =0x02, C =?, Z =? A : REG1 =0x00, W =0x02, C =1, Z =1 SUBWX REG1, 1 — B : REG1 =0x01, W =0x02, C =?, Z =? A : REG1 =0xFF, W =0x02, C =0, Z =0

SWAPX	**Swap Nibbles in "f"**
Syntax	SWAPX f [,d]
Operands	f : 000h ~ 1FFh, d : 0, 1
Operation	(destination,7~4) ← (f.3~0), (destination.3~0) ← (f.7~4)
Status Affected	-
OP-Code	ff00 1110 dfff ffff
Description	The upper and lower nibbles of register 'f' are exchanged. If 'd' is 0, the result is placed in W register. If 'd' is 1, the result is placed in register 'f'.
Cycle	1
Example	SWAPX REG1, 0 — B : REG1 =0xA5 A : REG1 =0xA5, W =0x5A

TABRH	**Return DPTR high byte to W**
Syntax	TABRH
Operands	-
Operation	(W) ← ROM[DPTR] high byte content, (TABR) ← ROM[DPTR] high byte content, Where DPTR = {DPH[max:8], DPL[7:0]}
Status Affected	-
OP-Code	0000 0000 0101 1000
Description	The W and TABR register is loaded with high byte of ROM[DPTR]. This is a two-cycle instruction.
Cycle	2

Example

```
MOVLW   (TAB1&0xFF)
MOVWX   DPL                 ;Where DPL is register
MOVLW   (TAB1>>8)&0xFF
MOVWX   DPH                 ;Where DPH is register

TABRL                       ;W =0x89, TABR=0x89
TABRH                       ;W =0x37, TABR=0x37

        ORG 0234H
TAB1:
DT      0x3789, 0x2277      ;ROM data 16 bits
```

TABRL	**Return DPTR low byte to W**
Syntax	TABRL
Operands	-
Operation	(W) ← ROM[DPTR] low byte content, (TABR) ← ROM[DPTR] low byte content, Where DPTR = {DPH[max:8], DPL[7:0]}
Status Affected	-
OP-Code	0000 0000 0101 0000
Description	The W and TABR register is loaded with low byte of ROM[DPTR]. This is a two-cycle instruction.
Cycle	2
Example	MOVLW (TAB1&0xFF) MOVWX DPL ;Where DPL is register MOVLW (TAB1>>8)&0xFF MOVWX DPH ;Where DPH is register TABRL ;W =0x89, TABR=0x89 TABRH ;W =0x37, TABR=0x37 ORG 0234H TAB1: DT 0x3789, 0x2277 ;ROM data 16 bits

TSTX	**Test if "f" is zero**
Syntax	TSTX f
Operands	f : 000h ~ 1FFh
Operation	Set Z flag if (f) is 0
Status Affected	Z
OP-Code	ff00 1000 1fff ffff
Description	If the content of register 'f' is 0, Zero flag is set to 1.
Cycle	1
Example	TSTX REG1 B : REG1 =0, Z =? A : REG1 =0, Z =1

XORLW	**Exclusive OR Literal with W**
Syntax	XORLW k
Operands	k : 00h ~ FFh
Operation	(W) ← (W) XOR k
Status Affected	Z
OP-Code	0001 1101 kkkk kkkk
Description	The contents of the W register are XOR'ed with the eight-bit literal 'k'. The result is placed in the W register.
Cycle	1
Example	XORLW 0xAF B : W =0xB5 A : W =0x1A

XORWX	**Exclusive OR W with "f"**	
Syntax	XORWX f [,d]	
Operands	f : 000h ~ 1FFh, d : 0, 1	
Operation	(destination) ← (W) XOR (f)	
Status Affected	Z	
OP-Code	ff00 0110 dfff ffff	
Description	Exclusive OR the contents of the W register with register 'f'. If 'd' is 0, the result is stored in the W register. If 'd' is 1, the result is stored back in register 'f'.	
Cycle	1	
Example	XORWX REG1, 1	B : REG1 =0xAF, W =0xB5 A : REG1 =0x1A, W =0xB5

ELECTRICAL CHARACTERISTICS

All of the parameters are based on the characteristics of tested samples.

1. Absolute Maximum Ratings

(T_A = 25℃)

Parameter	Rating	Unit
Supply voltage	V_{SS} -0.3 to V_{SS} +5.5	V
Input voltage	V_{SS} -0.3 to V_{CC} +0.3	V
Output voltage	V_{SS} -0.3 to V_{CC} +0.3	V
Output current high per 1 PIN	-25	mA
Output current high per all PIN	-80	mA
Output current low per 1 PIN	+30	mA
Output current low per all PIN	+150	mA
Maximum operating voltage	5.5	V
Operating temperature	-40 to +105	℃
Storage temperature	-65 to +150	℃

2. DC Characteristics

(T_A = 25℃, V_{CC} = 5.0V, unless otherwise specified)

Parameter	Symbol	Conditions		Min.	Typ.	Max.	Unit
Operating Voltage	V_{cc}	Fsys = 20 MHz (FXT)		2.6	–	5.5	V
		Fsys = 16 MHz (FIRC)(RDCTL=4ns) (PWMCKS=FIRC*1)(-40℃ ~ 105℃)		2.3	–	5.5	V
		Fsys = 8 MHz (FIRC/2) (RDCTL=4ns) (PWMCKS=FIRC*1) (-40℃ ~ 105℃)		1.6	–	5.5	V
Input High Voltage	V_{IH}	All Input	V_{CC} = 3.0~5.0V	0.6V_{CC}	–	V_{CC}	V
Input Low Voltage	V_{IL}	All Input	V_{CC} = 3.0~5.0V	V_{SS}	–	0.2V_{CC}	V
I/O port Source Current	I_{OH}	All I/O pin	V_{CC} = 5.0V, V_{OH} = 4.5V	6.4	12.8	–	mA
			V_{CC} = 3.0V, V_{OH} = 2.7V	2.7	5.4	–	mA
I/O port Sink Current	I_{OL}	All I/O pin except PA7 (HSINK=1)	V_{CC} = 5.0V, V_{OL} = 0.5V	31	62	–	mA
			V_{CC} = 3.0V, V_{OL} = 0.3V	14	28	–	mA
		All I/O pin (HSINK=0)	V_{CC} = 5.0V, V_{OL} = 0.5V	18	36	–	mA
			V_{CC} = 3.0V, V_{OL} = 0.3V	8	16	–	mA
Input Leakage Current (pin high)	I_{ILH}	All Input	V_{IN} = V_{CC}	–	–	1	μA
Input Leakage Current (pin low)	I_{ILL}	All Input	V_{IN} = 0V	–	–	–1	μA

Parameter	Symbol	Conditions		Min.	Typ.	Max.	Unit
Power Supply Current (No Load) (ATD On)	I_{CC}	FAST mode FXT 20 MHz POR/LVR On	V_{CC} = 5.0V	–	4.9	–	mA
			V_{CC} = 3.0V	–	2.6	–	
		FAST mode FIRC 16 MHz	V_{CC} = 5.0V	–	4.3	–	
			V_{CC} = 3.0V	–	2.5	–	
		FAST mode FIRC 8 MHz	V_{CC} = 5.0V	–	3	–	
			V_{CC} = 3.0V	–	1.7	–	
		FAST mode FIRC 4 MHz	V_{CC} = 5.0V	–	2	–	
			V_{CC} = 3.0V	–	1.3	–	
		FAST mode FIRC 2 MHz	V_{CC} = 5.0V	–	1.5	–	
			V_{CC} = 3.0V	–	0.89	–	
		SLOW mode SXT 32 KHz FIRC STOP POR/LVR On	V_{CC} = 5.0V	–	0.09	–	
			V_{CC} = 3.0V	–	0.054	–	
		SLOW mode SIRC div1 FIRC STOP POR/LVR On	V_{CC} = 5.0V	–	0.083	–	
			V_{CC} = 3.0V	–	0.055	–	
		SLOW mode SIRC div1 FIRC STOP POR/LVR Off ATD On	V_{CC} = 5.0V	–	0.026	–	
			V_{CC} = 3.0V	–	0.014	–	
		SLOW mode SIRC div1 FIRC STOP POR/LVR Off ATD Off	V_{CC} = 5.0V	–	0.57	–	
			V_{CC} = 3.0V	–	0.43	–	
		IDLE mode SIRC div1 POR/LVR Off	V_{CC} = 5.0V	–	8.1	–	μA
			V_{CC} = 3.0V	–	2.6	–	
		STOP mode POR/LVR Off	V_{CC} = 5.0V	–	–	1	μA
			V_{CC} = 3.0V	–	–	1	
Pull-up Resistor	R_{PU}	V_{IN} = 0 V Ports A, B, D	V_{CC} = 5.0V	–	36	–	KΩ
			V_{CC} = 3.0V	–	37.5	–	
Pull-down Resistor	R_{PD}	V_{IN} = Vcc Ports A, B, D	V_{CC} = 5.0V	–	35.3	–	KΩ
			V_{CC} = 3.0V	–	36.5	–	
POR Voltage	V_{POR}	T_A = 25℃		1.48	1.63	1.78	V

3. Clock Timing

The value of this parameter is based on the characteristics of tested samples.

Parameter	Condition		Min.	Typ.	Max.	Unit
FIRC Frequency (*)	T_A = -40℃ ~ 105℃	V_{CC} = 3.0 ~ 5.0V	-4%	16	+3%	MHz
	T_A = -40℃ ~ 105℃	V_{CC} = 4.0 V	-2.5%	16	+2%	
	T_A = 0℃ ~ 70℃	V_{CC} = 4.0 V	-2%	16	+1.5%	
	T_A = 25℃	V_{CC} = 3.5 ~ 5.0 V	-1%	16	+1%	
SIRC Frequency	T_A = 25℃	V_{CC} = 5.0 V	-2%	65.5	+2%	KHz

(*) FIRC frequency can be divided by 1/2/4/8.

4. Reset Timing Characteristics

(T_A = 25°C)

Parameter	Conditions	Min.	Typ.	Max.	Unit
RESET Input Low width	Input V_{CC} = 5.0 V ±10 %	–	15.3	–	μs
WDT time	V_{CC} = 5.0 V, WDTPSC = 11b	–	2001	–	ms
WKT time	V_{CC} = 5.0 V, WKTPSC = 11b	–	125	–	ms
CPU start up time	V_{CC} = 5.0 V	–	34.8	–	ms

5. LVR Circuit Characteristics

(T_A = 25℃)

Parameter	Symbol	Condition	LVRS	Min.	Typ.	Max.	Unit
LVR Voltage	LVR_{th}	T_A = 25℃	0001	–	1.73	–	V
			0010	–	1.85	–	
			0011	–	1.98	–	
			0100	–	2.11	–	
			0101	–	2.23	–	
			0110	–	2.36	–	
			0111	–	2.49	–	
			1000	–	2.61	–	
			1001	–	2.74	–	
			1010	–	2.87	–	
			1011	–	2.99	–	
			1100	–	3.12	–	
			1101	–	3.25	–	
			1110	–	3.37	–	
			1111	–	3.50	–	
LVR Hysteresis Window	V_{HYS_LVR}	T_A = 25℃		–	0	–	mV
Low Voltage Detection time	T_{LVR}	T_A = 25℃		100	–	–	μs

6. LVD Circuit Characteristics

(T_A = 25℃)

Parameter	Symbol	Condition	LVDS	Min.	Typ.	Max.	Unit
LVD Voltage	LVD_{th}	T_A = 25℃	0000	disable			V
			0001	–	1.73	–	
			0010	–	1.85	–	
			0011	–	1.98	–	
			0100	–	2.11	–	
			0101	–	2.23	–	
			0110	–	2.36	–	
			0111	–	2.49	–	
			1000	–	2.61	–	
			1001	–	2.74	–	
			1010	–	2.87	–	
			1011	–	2.99	–	
			1100	–	3.12	–	
			1101	–	3.25	–	
			1110	–	3.37	–	

			1111	–	3.50	–	
LVD Hysteresis Window	V_{HYS_LVD}	LVDHYS = 0		–	0	–	mV
		LVDHYS = 1		–	80	–	
Low Voltage Detection time	T_{LVD}	T_A = 25℃		100	–	–	μs

7. ADC Electrical Characteristics

(T_A = 25℃, V_{CC} = 3.0V to 5.5V, V_{SS} = 0V)

Parameter	Conditions	Min.	Typ.	Max.	Units
Total Accuracy	V_{CC} = 5.0V, V_{SS} = 0V, F_{ADC} = 1 MHz	–	±3	–	LSB
Integral Non-Linearity		–	±3.2	–	
Differential Non-Linearity		–	±1	±4	
Max Input Clock freq. (F_{ADC})	Source impedance (Rs<10K ohm)	–	–	2	MHz
	Source impedance (Rs<20K ohm)	–	–	1	
	Source impedance (Rs<50K ohm)	–	–	0.5	
	Source is VBG (ADCHS=01110b)	–	–	2	
Conversion Time	F_{ADC} = 1 MHz	–	42	–	μs
Conversion Current	Vcc=5V, ADVREFS=00b, ADVREF1P2=0	–	0.45	–	mA
	Vcc=4V, ADVREFS=01b	–	0.6	–	
BandGap Voltage Reference (1.2V V_{BG}) ADC reference voltage (V_{REF}) (ADVREFS=00b, ADVREF1P2=1b) (No power disturbance)	25°C, V_{CC} = 3.0V~5.0V	-1%	1.20	+1%	V
	25°C~105°C, V_{CC} = 3.0V~5.0V	-1%	1.20	+1.5%	V
	-20°C~105°C, V_{CC} = 3.0V~5.0V	-2%	1.20	+1.5%	V
BandGap Voltage Reference (2.56V V_{BG}) ADC reference voltage (V_{REF}) (ADVREFS=01b) (No power disturbance)	25°C, V_{CC} = 3.0V~5.5V	-1.2%	2.56	+1.2%	V
	-20°C~105°C, V_{CC} = 3.0V~5.5V	-2.5%	2.56	+2%	V
BandGap Voltage Reference (2V V_{BG}) ADC reference voltage (V_{REF}) (ADVREFS=11b) (No power disturbance)	25°C, V_{CC} = 3.0V~5.5V	-1.2%	2	+1.2%	V
	-20°C~105°C, V_{CC} = 3.0V~5.5V	-2.5%	2	+2%	V
V_{CC}/4 reference voltage	25°C, V_{CC} = 3.0V~5.5V	-2.3%	0.25V_{CC}	+2.3%	V
Input Voltage	–	V_{SS}	–	V_{REF}	V

8. EEPROM Characteristics

Parameter	Conditions	Min.	Typ.	Max.	Units
Write Voltage V_{EEWR}	-40℃ ~ 105° Fsys=FRC/1, VCC/47uF	2.5		5.5	V
Read Voltage V_{EERD}	-40℃ ~ 105° Fsys=FRC/1, VCC/47uF	2.5		5.5	V
Write Endurance N_{EE}*	V_{CC} =2.5~5.5V, -40℃ ~105℃	20K	–	–	cycles
	V_{CC}=3.0~5.5V, -40℃ ~105℃	30K	–	–	
	V_{CC}=2.5~5.5V, -20℃ ~ 85℃	30K	–	–	
Write Time T_{EEWR}	V_{CC} =5.0V, 25℃, WDT disable		1.5		ms
	V_{CC} =2.5V, 25℃, WDT disable		4		
	V_{CC} =3.0V, 105℃, WDT disable		15		
Data Retention Y_{RET}		10			Year

: The value of this parameter is based on the characteristics of tested samples.

9. Comparator Characteristics

(T_A = 25℃, V_{CC} = 3.0V to 5.5V, V_{SS} = 0V)

Parameter	Conditions	Min.	Typ.	Max.	Units
Power supply	–	2.2	–	5.5	V
Quiescent Current	V_{CC} = 5.0V	–	100	–	μA
DAC Current	V_{CC} = 5.0V	60	–	220	μA
V_{OS_CMP}	V_{CC} = 5.0V	-15	–	15	mV
V_{CM_CMP}	V_{CC} = 5.0V	0	–	V_{CC}-0.5	V
V_{HYS_CMP}	V_{CC} = 5.0V	-	25	-	mV

10. Characteristics Graphs

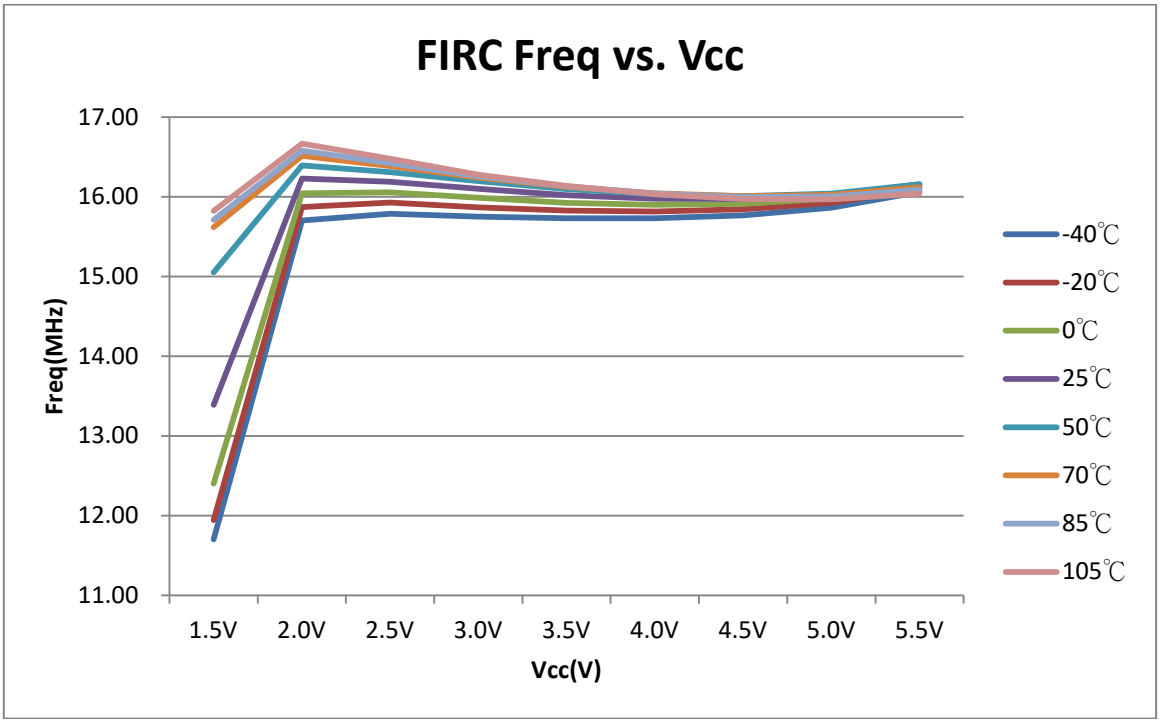

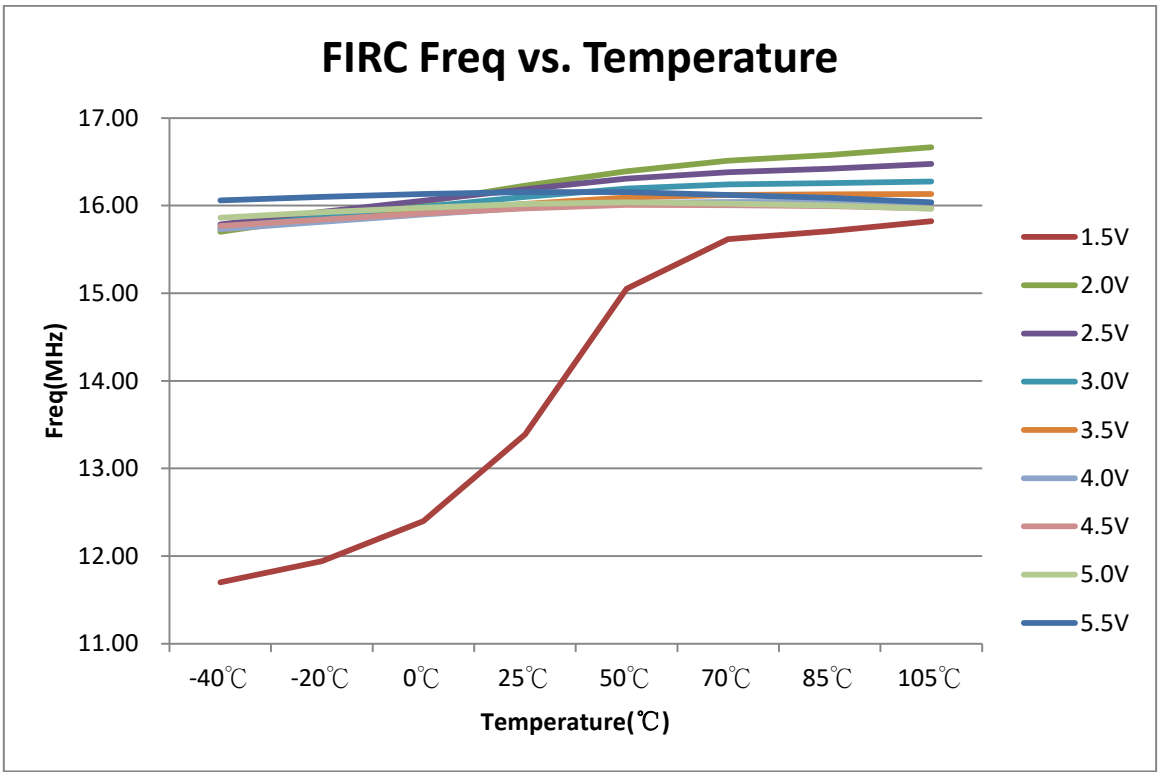
FIRC Freq vs. Temperature
17.00
16.00
15.00
14.00
13.00
12.00
11.00
Freq(MHz)
-40℃
-20℃
0℃
25℃
50℃
70℃
85℃
105℃
Temperature(℃)
1.5V
2.0V
2.5V
3.0V
3.5V
4.0V
4.5V
5.0V
5.5V

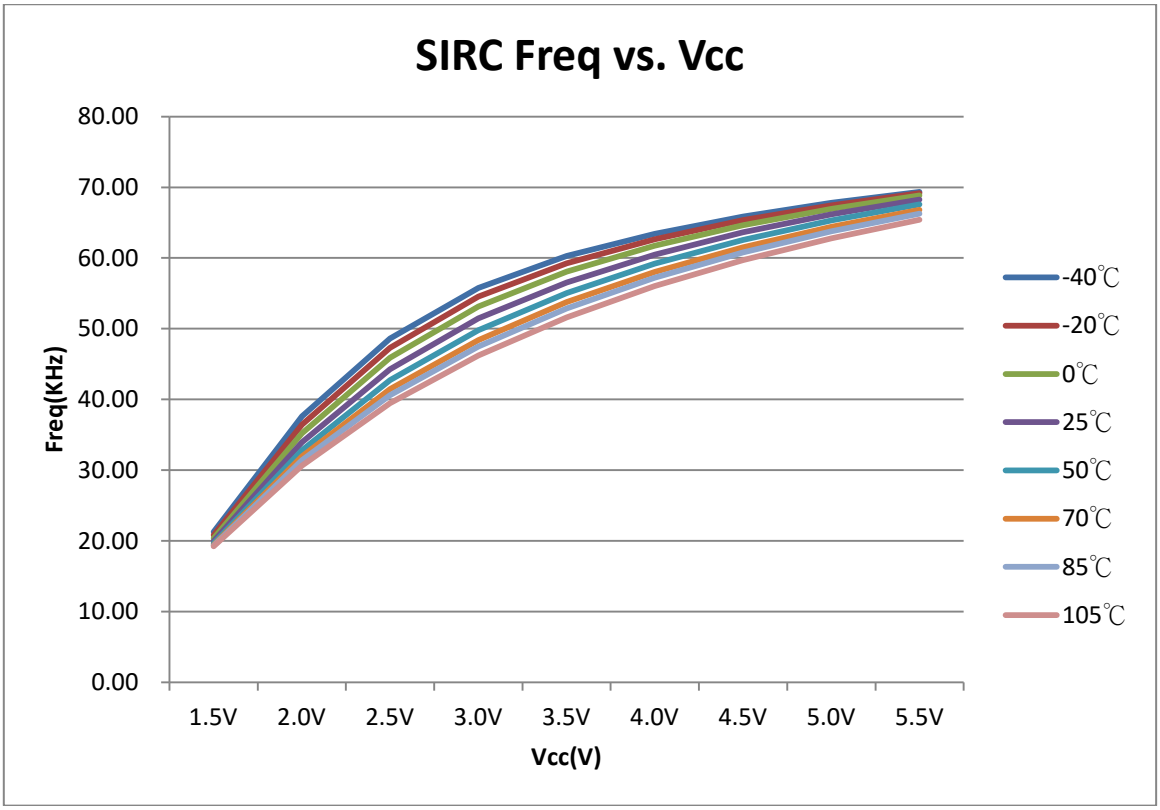
SIRC Freq vs. Vcc
80.00
70.00
60.00
50.00
40.00
30.00
20.00
10.00
0.00
Freq(KHz)
1.5V
2.0V
2.5V
3.0V
3.5V
4.0V
4.5V
5.0V
5.5V
Vcc(V)
-40℃
-20℃
0℃
25℃
50℃
70℃
85℃
105℃

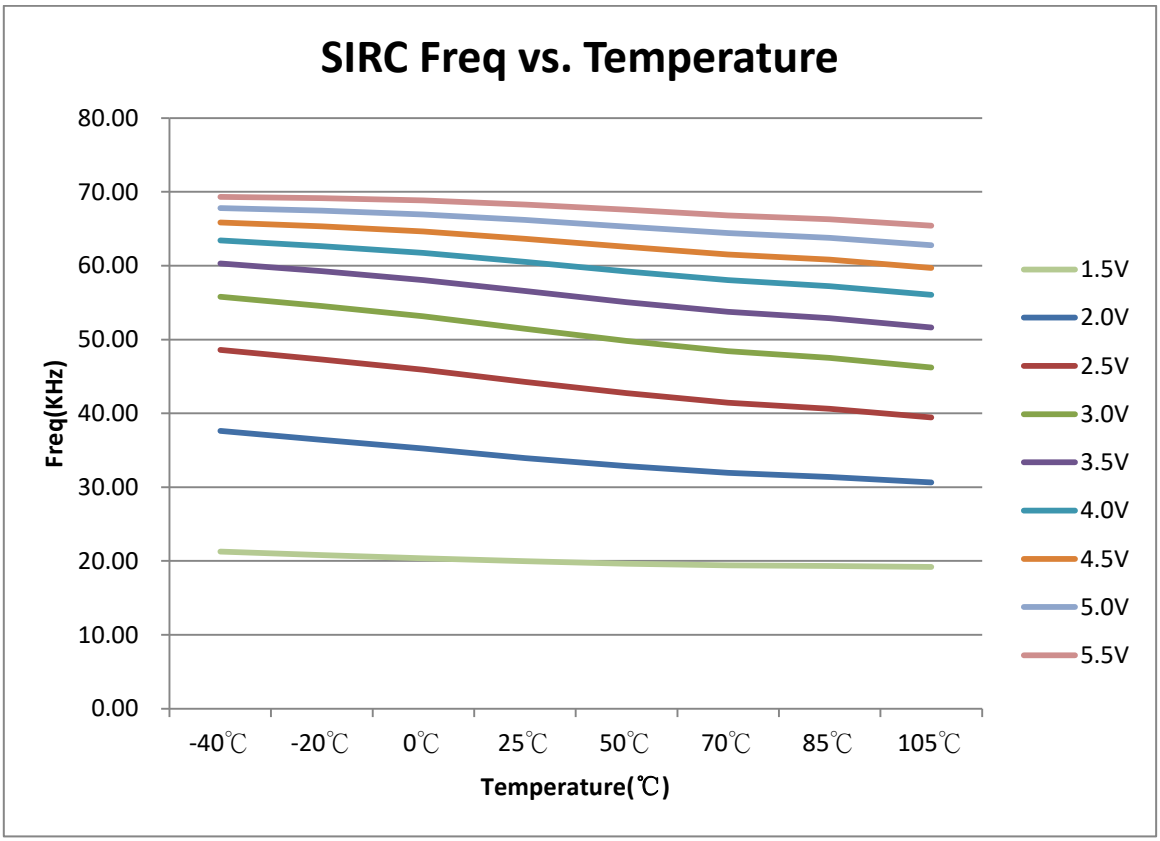

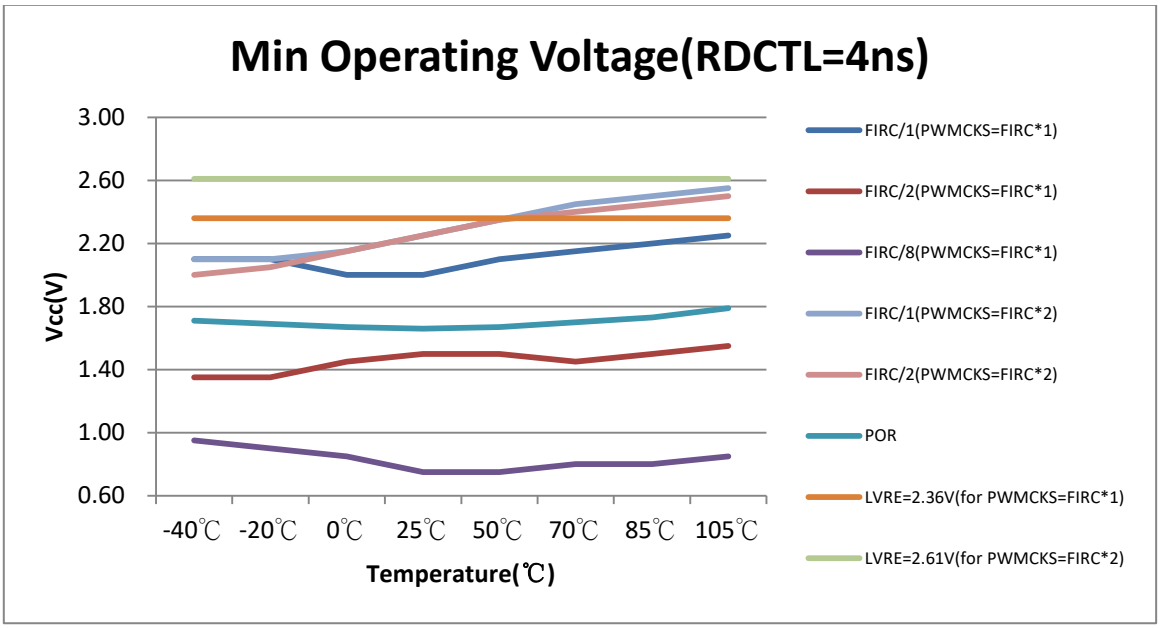

Note: **The user must switch RDCTL to "4ns" to enhance the performance of minimal operating voltage**

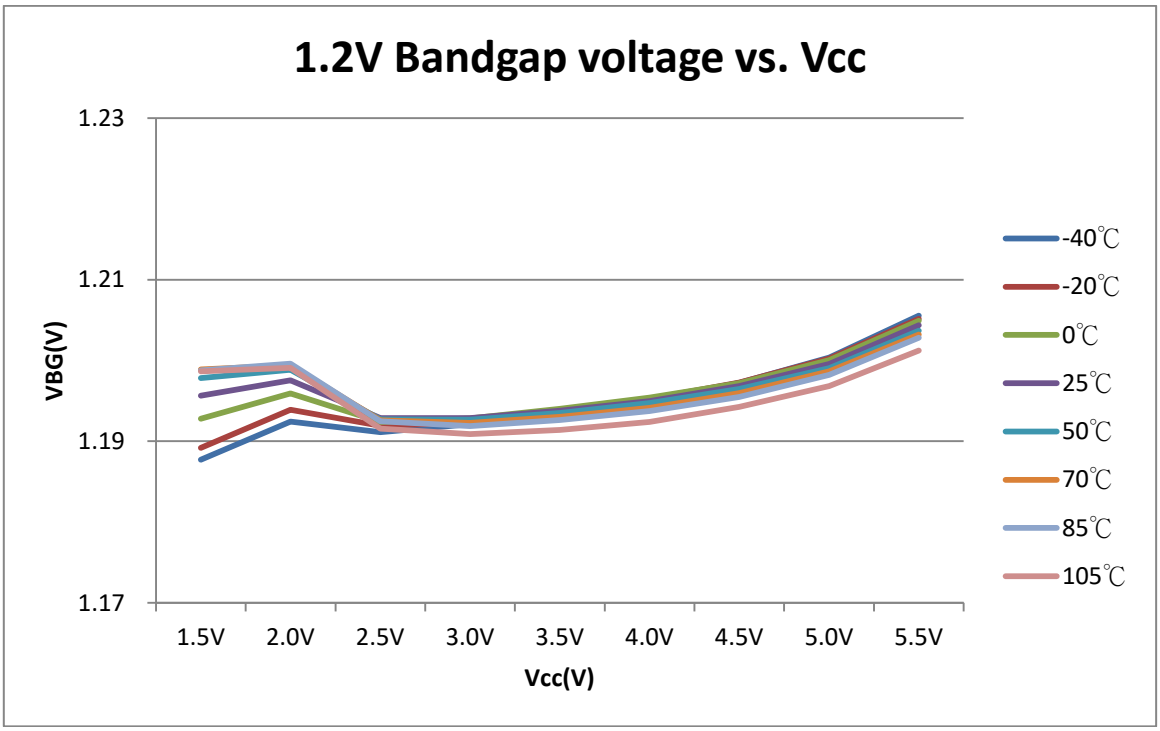
1.2V Bandgap voltage vs. Vcc
1.23
1.21
1.19
1.17
VBG(V)
1.5V
2.0V
2.5V
3.0V
3.5V
4.0V
4.5V
5.0V
5.5V
Vcc(V)
-40℃
-20℃
0℃
25℃
50℃
70℃
85℃
105℃

PACKAGING INFORMATION

Please note that the package information provided is for reference only. Since this information is frequently updated, users can contact Sales to consult the latest package information and stocks.

The ordering information:

Ordering number	Package
TM56E64223S	SOP 20-pin (300 mil)
TM56E64222S	SOP 16-pin (150 mil)
TM56E6422ES	SOP 14-pin (150 mil)
TM56E64221S	SOP 8-pin (150 mil)
TM56E64223T	TSSOP 20-pin (173 mil)
TM56E64223Q	QFN 20-pin (3x3x0.74-0.4 mm) (L=0.25 mm)
TM56E6422HM	MSOP 10-pin (118 mil)

SOP-20 (300 mil) Package Dimension

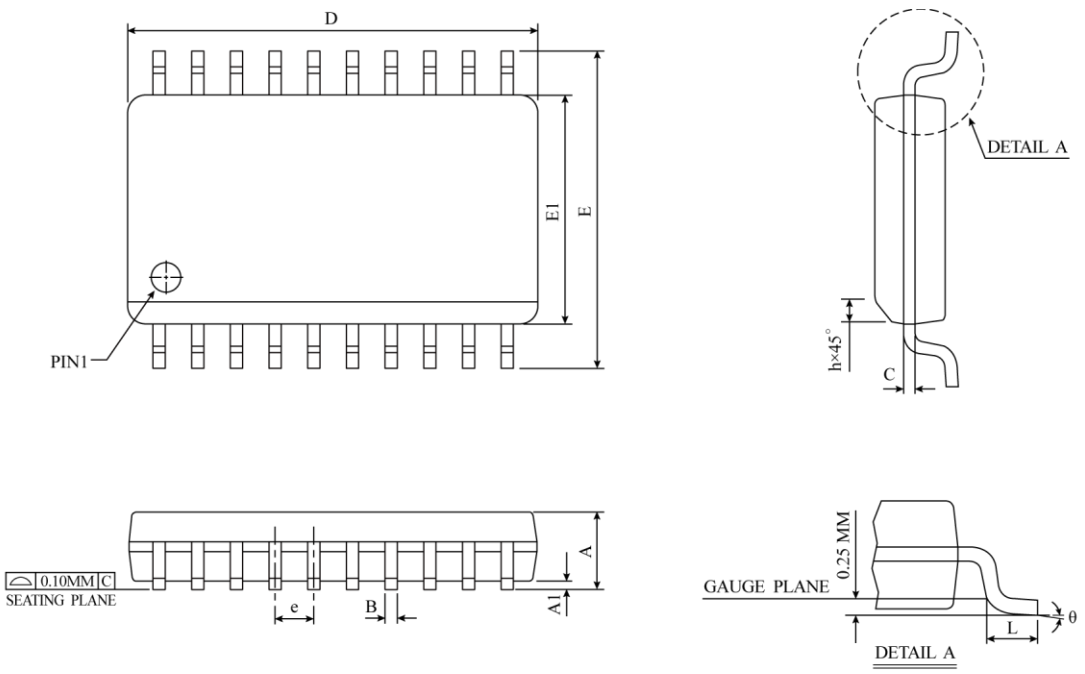

SYMBOL	DIMENSION IN MM			DIMENSION IN INCH		
	MIN	NOM	MAX	MIN	NOM	MAX
A	2.35	2.50	2.65	0.0926	0.0985	0.1043
A1	0.10	0.20	0.30	0.0040	0.0079	0.0118
B	0.33	0.42	0.51	0.0130	0.0165	0.0200
C	0.23	0.28	0.32	0.0091	0.0108	0.0125
D	12.60	12.80	13.00	0.4961	0.5040	0.5118
E	10.00	10.33	10.65	0.3940	0.4425	0.4910
E1	7.40	7.50	7.60	0.2914	0.2953	0.2992
e	1.27 BSC			0.050 BSC		
h	0.25	0.50	0.75	0.0100	0.0195	0.0290
L	0.40	0.84	1.27	0.0160	0.0330	0.0500
θ	0°	4°	8°	0°	4°	8°
JEDEC	MS-013 (AC)					

⚠ * NOTES : DIMENSION " D " DOES NOT INCLUDE MOLD FLASH, PROTRUSIONS OR GATE BURRS.
MOLD FLASH, PROTRUSIONS AND GATE BURRS SHALL
NOT EXCEED 0.15 MM (0.006 INCH) PER SIDE.

SOP-16 (150 mil) Package Dimension

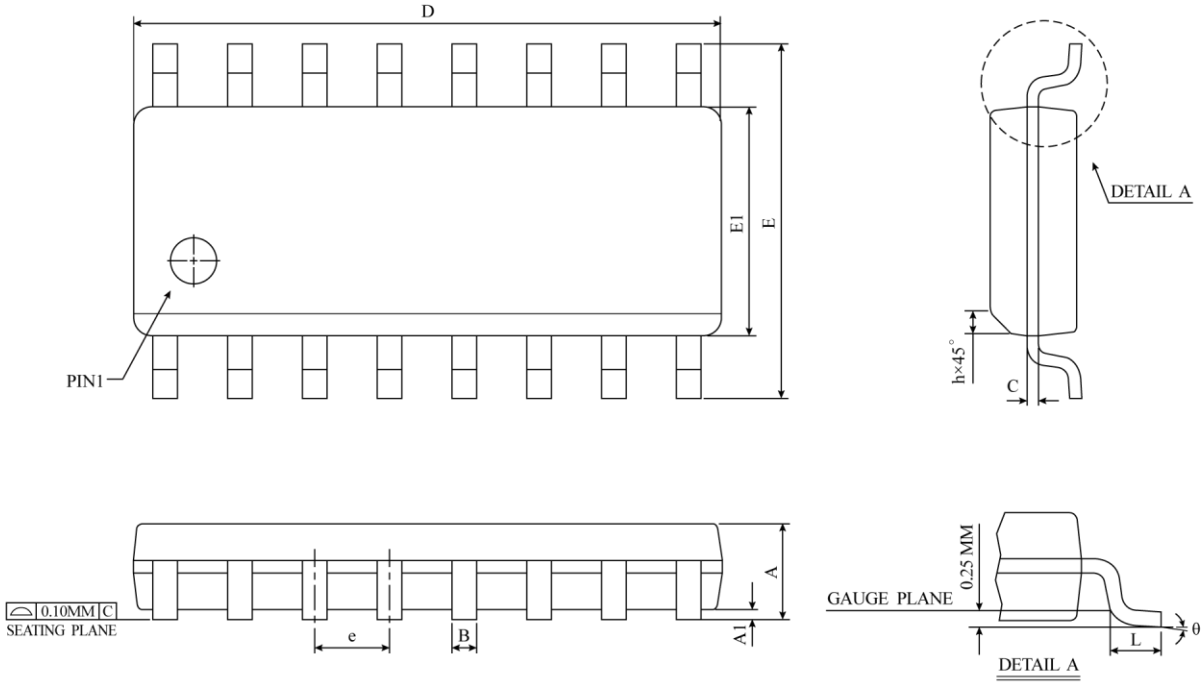

SYMBOL	DIMENSION IN MM			DIMENSION IN INCH		
	MIN	NOM	MAX	MIN	NOM	MAX
A	1.35	1.55	1.75	0.0532	0.0610	0.0688
A1	0.10	0.18	0.25	0.0040	0.0069	0.0098
B	0.33	0.42	0.51	0.0130	0.0165	0.0200
C	0.19	0.22	0.25	0.0075	0.0087	0.0098
D	9.80	9.90	10.00	0.3859	0.3898	0.3937
E	5.80	6.00	6.20	0.2284	0.2362	0.2440
E1	3.80	3.90	4.00	0.1497	0.1536	0.1574
e	1.27 BSC			0.050 BSC		
h	0.25	0.38	0.50	0.0099	0.0148	0.0196
L	0.40	0.84	1.27	0.0160	0.0330	0.0500
θ	0°	4°	8°	0°	4°	8°
JEDEC	MS-012 (AC)					

△ * NOTES : DIMENSION " D " DOES NOT INCLUDE MOLD FLASH, PROTRUSIONS OR GATE BURRS.
MOLD FLASH, PROTRUSIONS AND GATE BURRS SHALL
NOT EXCEED 0.15 MM (0.006 INCH) PER SIDE.

SOP-14 (150 mil) Package Dimension

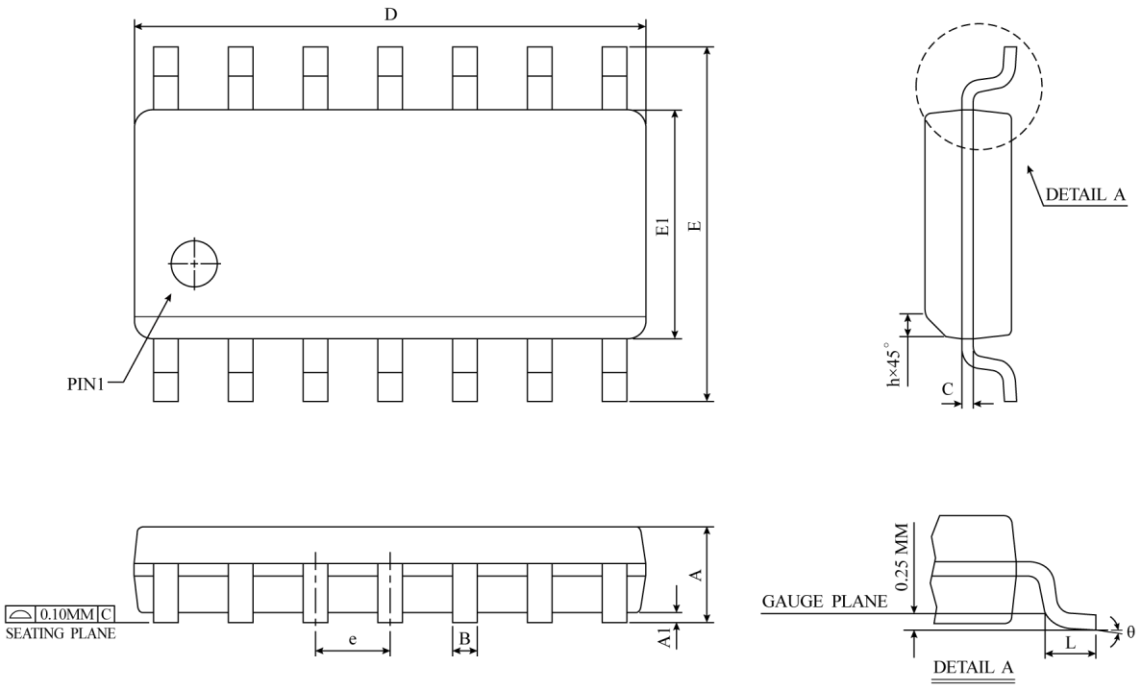

SYMBOL	DIMENSION IN MM			DIMENSION IN INCH		
	MIN	NOM	MAX	MIN	NOM	MAX
A	1.35	1.55	1.75	0.0532	0.0610	0.0688
A1	0.10	0.18	0.25	0.0040	0.0069	0.0098
B	0.33	0.42	0.51	0.0130	0.0165	0.0200
C	0.19	0.22	0.25	0.0075	0.0087	0.0098
D	8.55	8.65	8.75	0.3367	0.3410	0.3444
E	5.80	6.00	6.20	0.2284	0.2362	0.2440
E1	3.80	3.90	4.00	0.1497	0.1536	0.1574
e	1.27 BSC			0.050 BSC		
h	0.25	0.38	0.50	0.0099	0.0148	0.0196
L	0.40	0.84	1.27	0.0160	0.0330	0.0500
θ	0°	4°	8°	0°	4°	8°
JEDEC	MS-012 (AB)					

⚠ * NOTES : DIMENSION " D " DOES NOT INCLUDE MOLD FLASH, PROTRUSIONS OR GATE BURRS.
MOLD FLASH, PROTRUSIONS AND GATE BURRS SHALL
NOT EXCEED 0.15 MM (0.006 INCH) PER SIDE.

SOP-8 (150 mil) Package Dimension

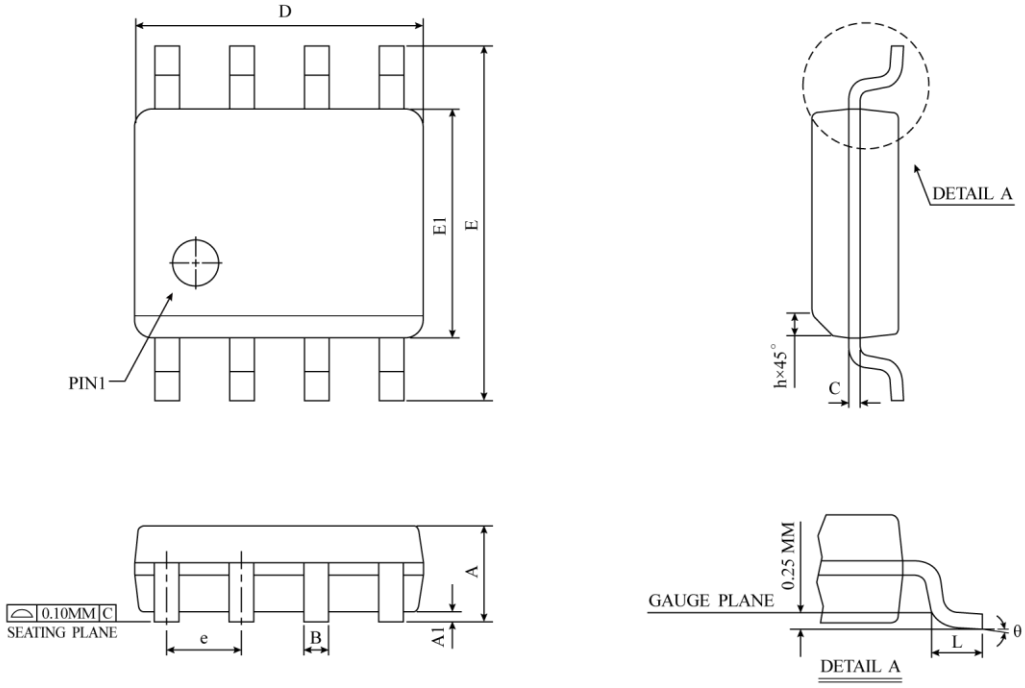

SYMBOL	DIMENSION IN MM			DIMENSION IN INCH		
	MIN	NOM	MAX	MIN	NOM	MAX
A	1.35	1.55	1.75	0.0532	0.0610	0.0688
A1	0.10	0.18	0.25	0.0040	0.0069	0.0098
B	0.33	0.42	0.51	0.0130	0.0165	0.0200
C	0.19	0.22	0.25	0.0075	0.0087	0.0098
D	4.80	4.90	5.00	0.1890	0.1939	0.1988
E	5.80	6.00	6.20	0.2284	0.2362	0.2440
E1	3.80	3.90	4.00	0.1497	0.1536	0.1574
e	1.27 BSC			0.050 BSC		
h	0.25	0.38	0.50	0.0099	0.0148	0.0196
L	0.40	0.84	1.27	0.0160	0.0330	0.0500
θ	0°	4°	8°	0°	4°	8°
JEDEC	MS-012 (AA)					

A * NOTES : DIMENSION " D " DOES NOT INCLUDE MOLD FLASH, PROTRUSIONS OR GATE BURRS.
MOLD FLASH, PROTRUSIONS AND GATE BURRS SHALL
NOT EXCEED 0.15 MM (0.006 INCH) PER SIDE.

TSSOP-20 (173 mil) Package Dimension

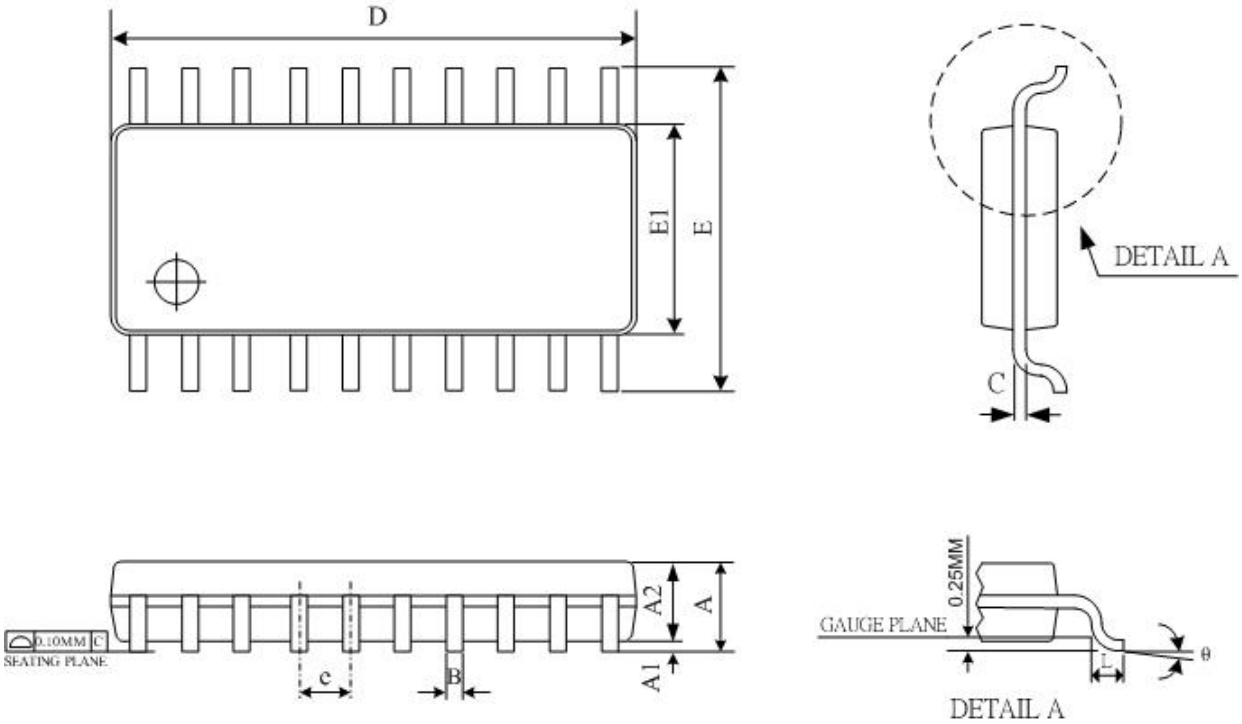

SYMBOL	DIMENSION IN MM			DIMENSION IN INCH		
	MIN	NOM	MAX	MIN	NOM	MAX
A	-	-	1.2	-	-	0.047
A1	0.05	0.10	0.15	0.002	0.004	0.006
A2	0.8	0.93	1.05	0.031	0.036	0.041
B	0.19	-	0.3	0.007	-	0.012
D	6.4	6.5	6.6	0.252	0.256	0.260
E	6.25	6.4	6.55	0.246	0.252	0.258
E1	4.3	4.4	4.5	0.169	0.173	0.177
e	0.65 BSC			0.026 BSC		
L	0.45	0.60	0.75	0.018	0.024	0.030
θ	0 °		8 °	0 °		8 °
JEDEC	MO-153 AC REV.F					

Notes：
1.DIMENSION "D" DOES NOT INCLUDE MOLD FLASH, PROTRUSIONS OR GATE BURRS. MOLD FLASH, PROTRUSIONS OR GATE BURRS SHALL NOT EXCEED 0.15 PER SIDE.
2.DIMENSION "E1" DOES NOT INCLUDE INTERLEAD FLASH OR PROTRUSION. INTERLEAD FLASH OR PROTRUSION SHALL NOT EXCEED 0.25 PER SIDE.
3.DIMENSION "B" DOES NOT INCLUDE DAMBAR PROTRUSION.ALLOWABLE DAMBAR PROTRUSION SHALL BE 0.08MM TOTAL IN EXCESS OF THE "B" DIMENSION AT MAXIMUM METERIAL CONDITION. DAMBAR CANNOT BE LOCATED ON THE LOWER RADIUS OF THE FOOT. MINIMUM SPACE BETWEEN PROTRUSION AND ADJACENT LEAD IS 0.07MM.

QFN-20 (3x3x0.75-0.4 mm) (L=0.25 mm) Package Dimension

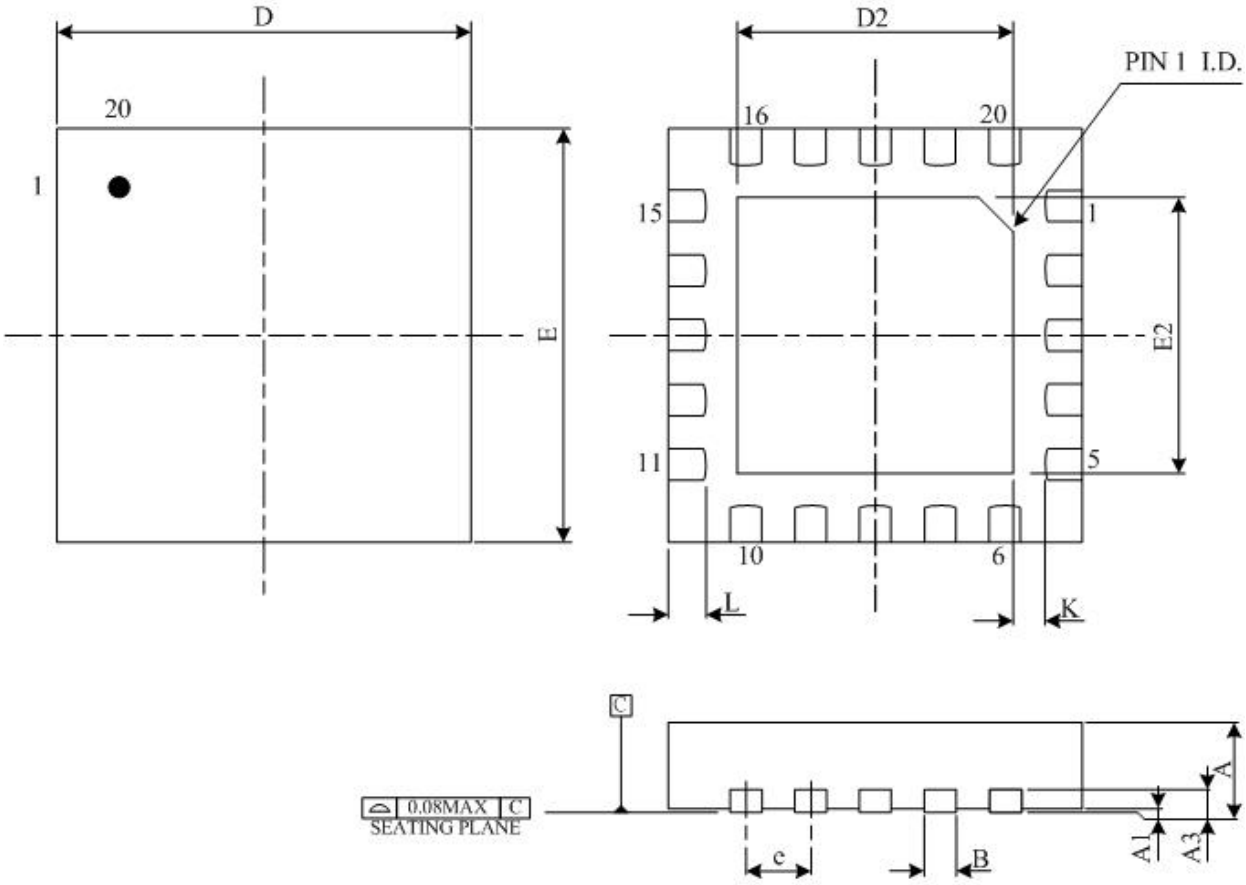

SYMBOL	DIMENSION IN MM			DIMENSION IN INCH		
	MIN	NOM	MAX	MIN	NOM	MAX
A	0.70	0.75	0.80	0.028	0.030	0.031
A1	0.00	0.02	0.05	0.00	0.001	0.002
A3	0.203 REF			0.008 REF		
B	0.15	0.20	0.25	0.006	0.008	0.010
D	3 BSC			0.118 BSC		
E	3 BSC			0.118 BSC		
D2	1.80	1.90	2.00	0.071	0.075	0.079
E2	1.80	1.90	2.00	0.071	0.075	0.079
e	0.40 BSC			0.016 BSC		
L	0.15	0.25	0.35	0.006	0.010	0.014
K	0.30 REF			0.012 REF		
JEDEC	MO-220					

MSOP-10 (118 mil) Package Dimension

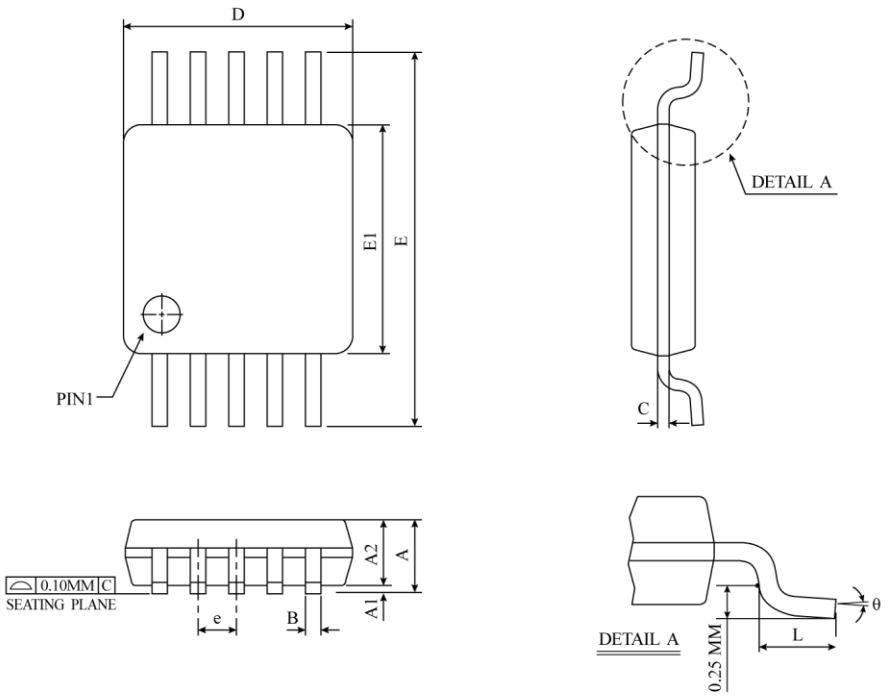

SYMBOL	DIMENSION IN MM			DIMENSION IN INCH		
	MIN	NOM	MAX	MIN	NOM	MAX
A	0.81	0.96	1.10	0.032	0.038	0.043
A1	0.05	0.10	0.15	0.002	0.004	0.006
A2	0.75	0.85	0.95	0.030	0.034	0.037
B	0.17	0.22	0.27	0.007	0.009	0.011
C	0.13	0.18	0.23	0.005	0.007	0.009
D	2.90	3.00	3.10	0.114	0.118	0.122
E	4.75	4.90	5.05	0.187	0.193	0.199
E1	2.90	3.00	3.10	0.114	0.118	0.122
e	0.50 BSC			0.020 BSC		
L	0.40	0.55	0.70	0.016	0.022	0.028
θ	0°	3°	6°	0°	3°	6°
JEDEC						

⚠ * NOTES : DIMENSION " D " DOES NOT INCLUDE MOLD PROTRUSIONS OR GATE BURRS.
MOLD PROTRUSIONS AND GATE BURRS SHALL NOT EXCEED 0.12 MM (0.005 INCH) PER SIDE.
DIMENSION " E1 " DOES NOT INCLUDE MOLD PROTRUSIONS
MOLD PROTRUSIONS SHALL NOT EXCEED 0.25 MM (0.010 INCH) PER SIDE.