十速科技股份有限公司
tenx technology inc.

Advance Information

4-Bit Micro-Controller

TM87 series

SZ027_02

The Temperature Sensor Interface

Application Note

Tenx reserves the right to change or discontinue this product without notice.

tenx technology inc.

INDEX

PRODUCT NAME 2
SZ027_02 2
APPLICATION NOTE 2
1. Introduction 2
2. Circuit and principle 2
3. Software and hardware description 2
4. DEMO program flowchart 4
5. Miscellaneous notes 5
6. The resistance table for 103AT thermistor at 0℃ ~ 40℃ 5

PRODUCT NAME

SZ027_02

TITLE

The Temperature Sensor Interface

APPLICATION NOTE

1. Introduction

Methods for testing temperature using RFC circuit and thermistor in the TM87/68 series chips will be introduced in this article. RFC circuit is a circuit specifically designed to test the resistance of resistors. Its basic principle is to form different RC circuits and measure their corresponding frequencies to calculate the resistance of a particular RC circuit. The application of RFC circuit will be introduced in detail using thermistor as examples in the following.

2. Circuit and principle

We know the Cut-off frequency of a RC circuit is：

$$f_g = \frac{1}{2\pi \cdot \tau} = \frac{1}{2\pi \cdot R \cdot C}$$

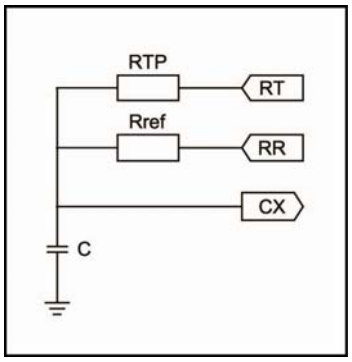

The cut-off frequencies for the two RC circuits formed by RTP and Rref with capacitor C can be expressed respectively：

$$f_{RTP} = \frac{1}{2\pi \cdot Rrtp \cdot C} \quad , \quad f_{Rref} = \frac{1}{2\pi \cdot Rref \cdot C}$$

Assuming a period T and the oscillation counts, CT and Cr, corresponding to two circuits, then $T = \frac{CT}{frtp} = \frac{Cr}{fRref}$ from above： $\frac{CT}{Cr} = \frac{Rref}{Rrtp}$

Therefore, we can measure the oscillation counts for the two circuits and combine with the known R_{ref} to calculate the unknown resistance R_{RTP}.

3. Software and hardware description

The selection of parameters for DEMO program：

- Reference resistance R_{REF} uses 10 KΩ
- Capacitance uses 0.01μF
- Counting period uses 125mS
- The thermistor used is Semitec 103AT

- Explanation： because the accuracy of the reference resistance will impact the accuracy of the measurement, precision resistor should be used. The two parameters, capacitance and counting time, are related to each other. The larger the capacitance is, the smaller the frequency becomes. Therefore, the counting time should be increased in order to improve the accuracy. Readers can adjust these two parameters in their own applications accordingly.

- Explanation for the calculation of the DEMO program：

  As mentioned in the previous principle section, $\frac{Rrtp}{Rref} = \frac{Cr}{CT}$, we can compile the $\frac{Rrtp}{Rref}$ values into a look up table based on this equation. Because its value is relatively small, it can be multiply by a fixed large factor so that it can be converted into a hexadecimal number easily. This DEMO program multiplies this value by 4096, i.e. $\frac{Rrtp}{Rref} \times 4096$, and then converts it into a hexadecimal value.

  Example：

  At 0℃, the standard resistance of the thermistor is 27.28 KΩ,

  and $\frac{27.28}{10} \times 4096 = 11173 = 2BA5H$

  At 1℃, it is $\frac{26.13}{10} \times 4096 = 10702 = 29CEH$

  Once the look up table is there, what the program needs to do is just to read the two count values of C_r and C_T. Then multiply C_r by 4096 and divided by C_T. The resultant value will be compared with the values in the look up table to find the corresponding value; the location of this value will, then, be combined with the characteristics of the look up table to calculate the corresponding temperature value.

4. DEMO program flowchart

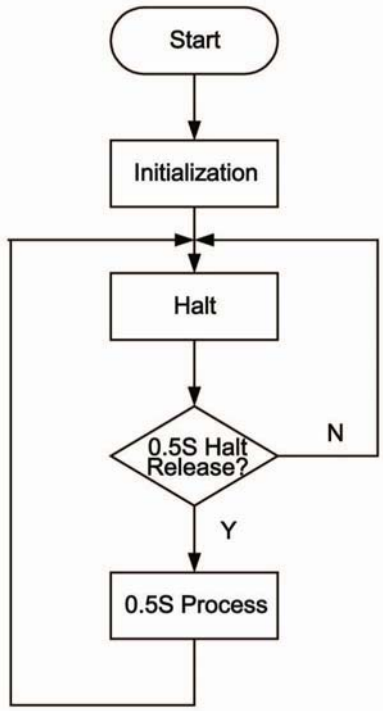

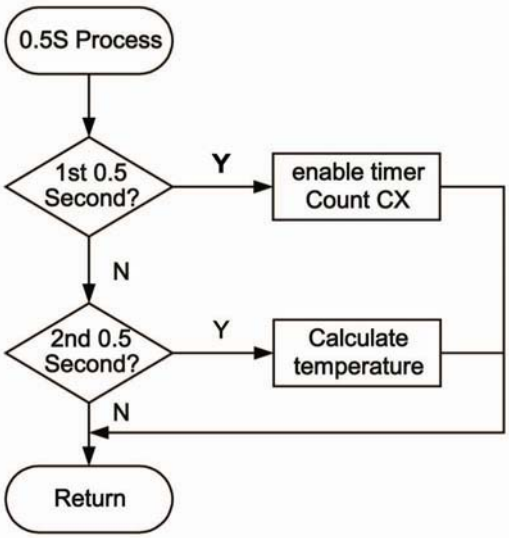

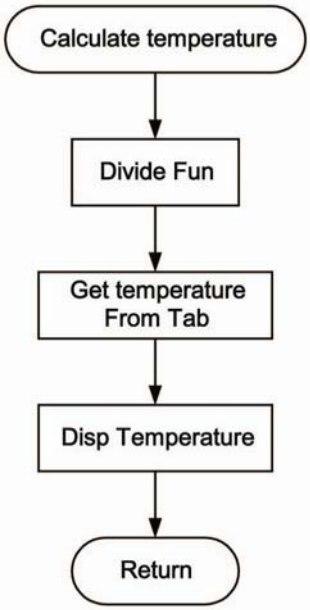

Divide Fun：

This function is mainly to multiply C_r by 4096 and then be divided by C_T.

Get Temperature Form Table：

The main function is to compare the resultant value with the values in the lookup table to find the corresponding location of this value.

DispTemperature：

Calculate the resultant temperature value.

5. Miscellaneous notes

How to improve the testing accuracy of the method： the main purpose of providing this DEMO program is to let you understand the RFC mechanism. Some modules are removed to improve the readability of the program. As a result, the accuracy of the program is ±1℃. Linear iterative method can be used to improve the accuracy： use a straight line to replace the original curve within 1℃ and keep on refine further will obtain results with better accuracy. Users can determine the accuracy of the method based on their own requirement.

6. The resistance table for 103AT thermistor at 0℃ ~ 40℃

Datasheet of 103AT

Temperature (℃)	Max. Resistance (KΩ)	Std. Resistance (KΩ)	Min. Resistance (KΩ)	Temperature Tolerance	(℃)
0	27.83	27.28	26.74	-0.5	+0.5
1	26.65	26.13	25.62	-0.5	+0.5
2	25.52	25.03	24.56	-0.5	+0.5
3	24.44	23.99	23.54	-0.5	+0.5
4	23.42	23.00	22.58	-0.5	+0.5
5	22.45	22.05	21.66	-0.5	+0.5
6	21.52	21.15	20.78	-0.5	+0.5
7	20.64	20.30	19.95	-0.5	+0.5
8	19.81	19.48	19.16	-0.5	+0.5
9	19.01	18.70	18.40	-0.4	+0.5
10	18.24	17.96	17.68	-0.4	+0.4
11	17.51	17.24	16.98	-0.4	+0.4
12	16.81	16.56	16.31	-0.4	+0.4
13	16.14	15.90	15.67	-0.4	+0.4
14	15.50	15.28	15.06	-0.4	+0.4
15	14.89	14.69	14.48	-0.4	+0.4
16	14.31	14.12	13.93	-0.4	+0.4
17	13.75	13.58	13.40	-0.4	+0.4
18	13.22	13.06	12.89	-0.4	+0.4
19	12.72	12.56	12.41	-0.4	+0.4
20	12.24	12.09	11.95	-0.4	+0.4
21	11.77	11.63	11.50	-0.3	+0.4
22	11.32	11.20	11.07	-0.3	+0.3
23	10.90	10.78	10.67	-0.3	+0.3
24	10.49	10.38	10.27	-0.3	+0.3
25	10.10	10.00	9.900	-0.3	+0.3
26	9.732	9.632	9.533	-0.3	+0.3
27	9.380	9.281	9.181	-0.3	+0.3
28	9.043	8.944	8.845	-0.4	+0.4
29	8.721	8.622	8.523	-0.4	+0.4
30	8.412	8.313	8.215	-0.4	+0.4
31	8.112	8.014	7.917	-0.4	+0.4
32	7.826	7.728	7.631	-0.4	+0.4
33	7.551	7.454	7.358	-0.4	+0.4
34	7.288	7.192	7.096	-0.4	+0.4
35	7.035	6.940	6.846	-0.4	+0.4
36	6.793	6.699	6.605	-0.4	+0.4
37	6.560	6.467	6.375	-0.5	+0.5
38	6.337	6.245	6.154	-0.5	+0.5
39	6.123	6.032	5.942	-0.5	+0.5
40	5.918	5.827	5.738	-0.5	+0.5

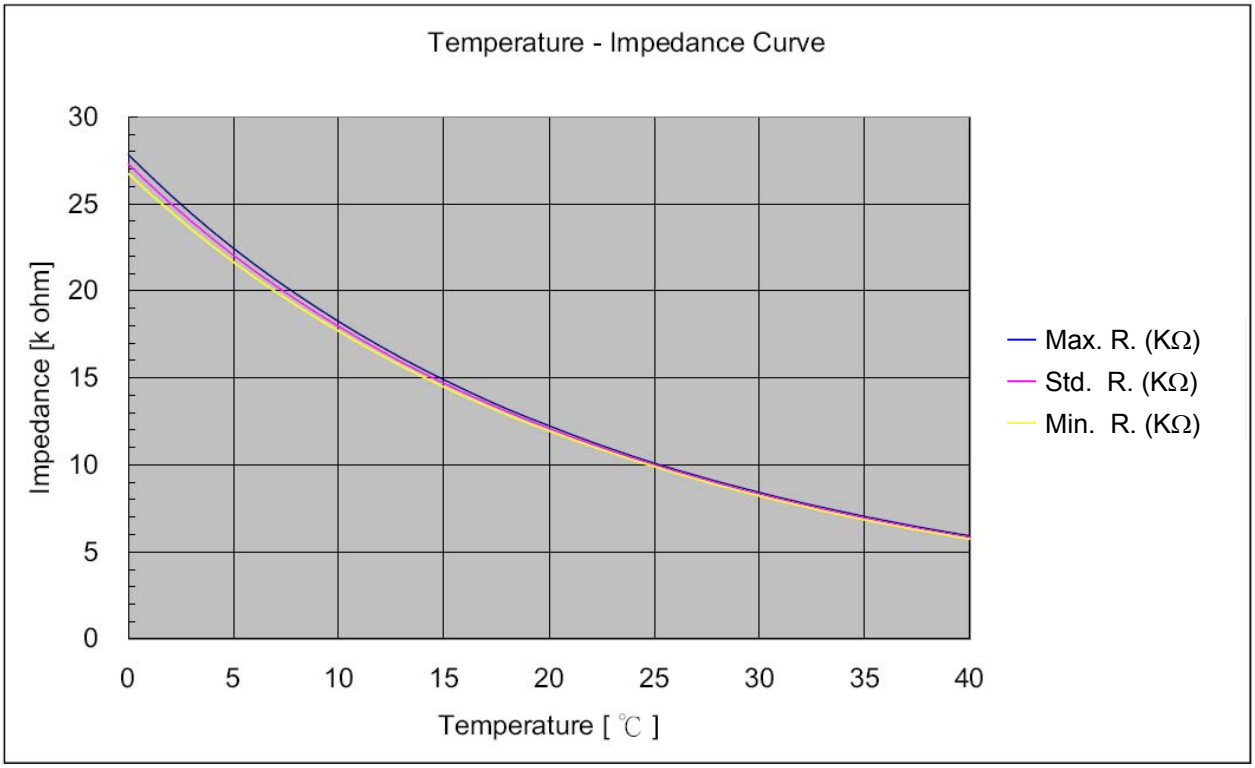
Temperature - Impedance Curve
Impedance [k ohm]
30
25
20
15
10
5
0
0
5
10
15
20
25
30
35
40
Temperature [℃]
Max. R. (KΩ)
Std. R. (KΩ)
Min. R. (KΩ)